Modulbox Compact - 5M XTS B Version
35.0512000.BL

- DIN Rail mounting enclosure to suit varying electronic and electrical applications
- One open side for terminal blocks/connectors and one high shoulder to increase internal volume for components
- Top panel is produced as part of the mould (non-removeable)
- Customisation options are available including machining and/or printing to customer specific requirements
- Kit supplied includes, base, cover and DIN rail hook



Hitaltech SA/NV
(Sales Benelux, France & Italy)
T: +32 2725 2075
E: europe-sales@hitaltech.com

Hitaltech UK Ltd
(Sales UK & Eire)
T: +44 (0) 1253 899910
E: uksales@hitaltech.co.uk

Hitaltech Gmbh
(Sales Germany)
T: +49 (0) 351 65 57 39 10
E: de-verkauf@hitaltech.com

Hitaltech Corp. Japan
(Sales Asia)
T: +81 (0)467 23 81 00
E: japan-sales@hitaltech.com

Hitaltech Headquarters
(Sales for the Rest of the World)
T: +32 2725 2075
E: europe-sales@hitaltech.com

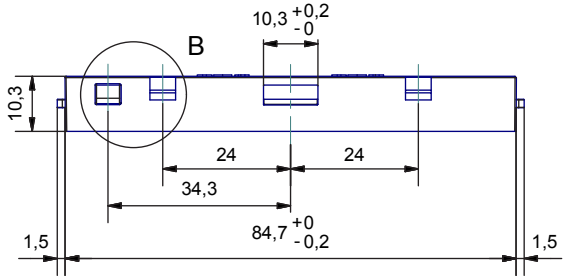

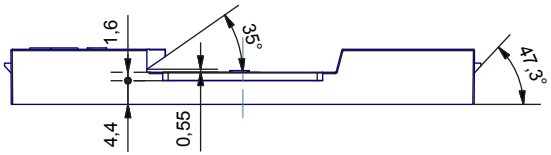

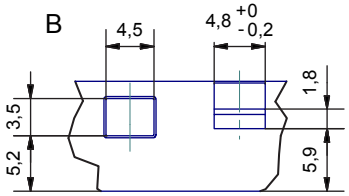

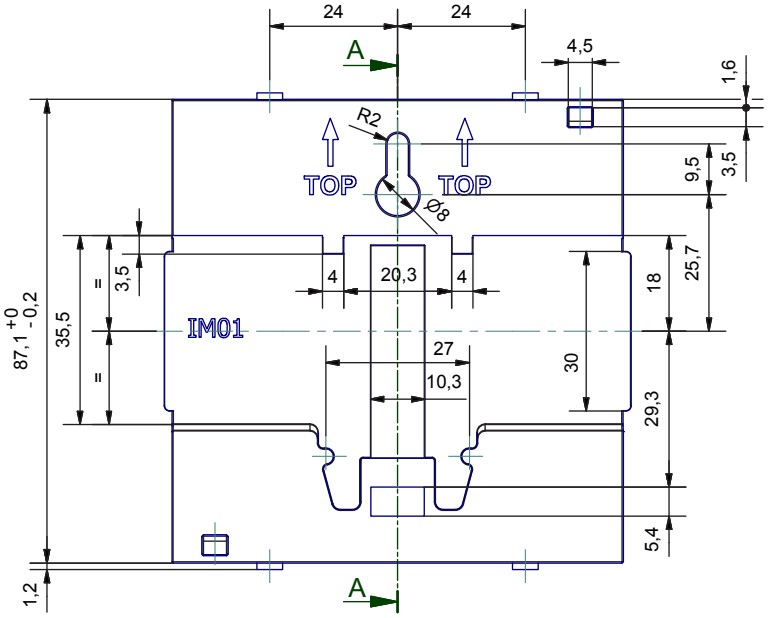

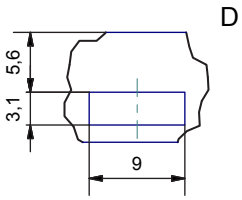

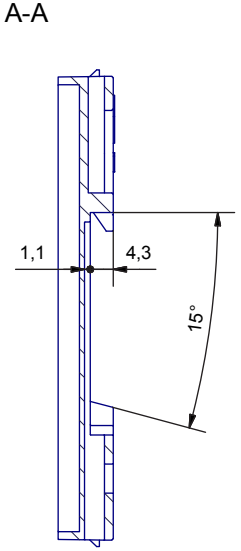

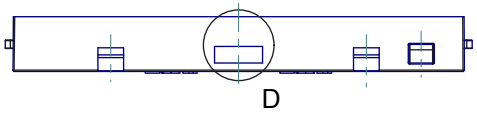

RESERVED PROPERTY The present drawing cannot be reproduced or comunicated to 3d parties, even partially, without the authorization of ITALTRONIC Srl. Italtronic reserves to protect its own rights according to the law.	Dimension in mm	SHEET NR. 1 / 1	DRAWING BY Manual modification are not allowed	GENERAL TOLERANCE ± 0.2 mm	5 Allargata sede per guida din "IM01" 11-05-2012 D.D.M. 4 Eliminata nervatura blocco agganci. 14/05/2008 Zorzato E. 3 2 1
		Date: 31/07/2007		Replace nr.	Revision description
	Drawed: Zorzato E.	Checked: Mazzucato F.		Scale:	

Hitaltech
A group of connecting technologies

Denomination:
Base 5M-XT
5M-XT Base

italtronic
enclosures for electronics

Drawing nr.
M-01989-02

Dimension of PCB

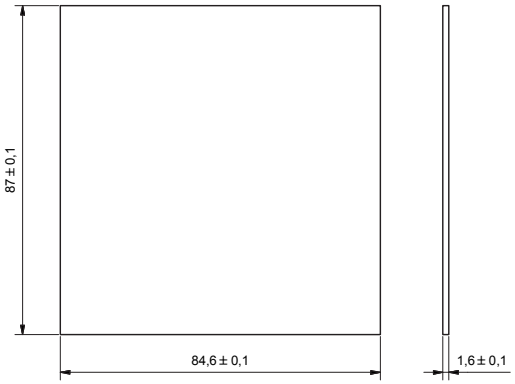

B-B (1 : 1)

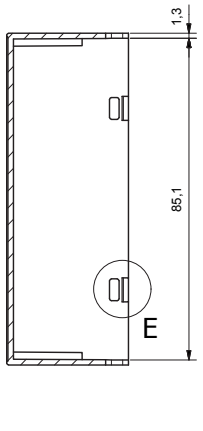

Body enclosure

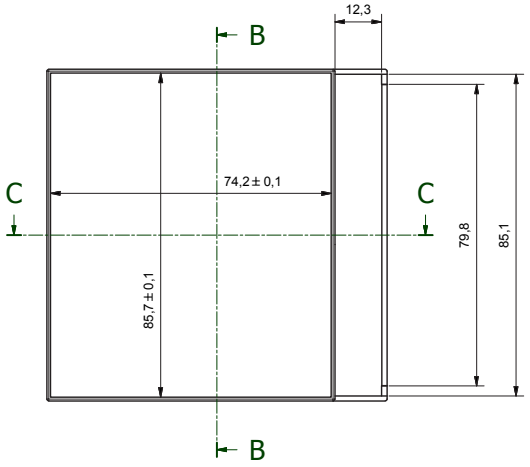

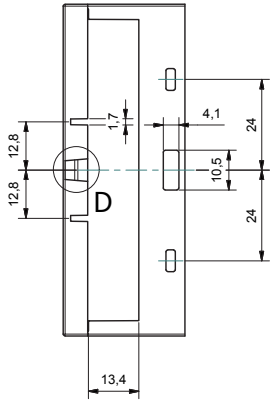

Assembly

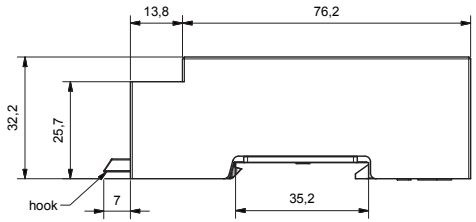

D (2 : 1)

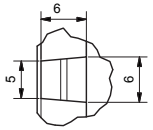

E (2 : 1)

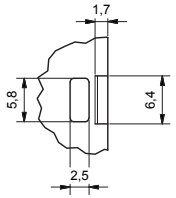

F (2 : 1)

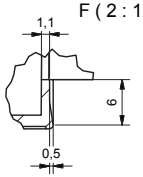

C-C (1 : 1)

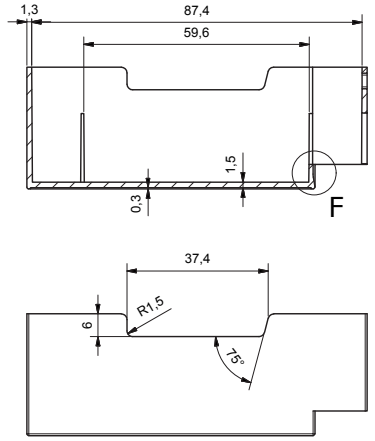

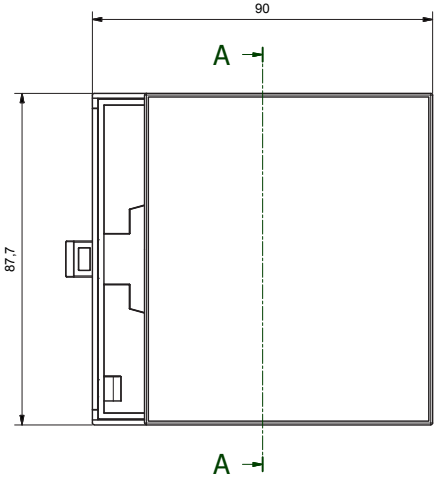

A-A (1 : 1)

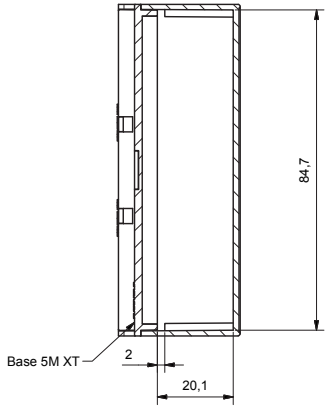

Da 0,5 a 3	Oltre 3 fino a 6	Oltre 6 fino a 30	Oltre 30 fino a 120	Oltre 120
± 0,1	± 0,1	± 0,2	± 0,3	± 0,5

RESERVED PROPERTY
The present drawing cannot be reproduced or comunicated to 3d parties, even partially, without the authorization of ITALTRONIC Srl. Italtronic reserves to protect its own rights according to the law.

Dimension in mm

SHEET NR. 1 / 1

DRAWING BY Manual modification are not allowed

GENERAL TOLERANCE **UNI EN 22768/1 Media (m)**

Date: 19/05/2014

Replace nr.

Drawed: Rigato N.

Checked: Dalla Montà D.

Scale:

5	4	3	2	1

Revision description

Denomination:

Contenitore Modulbox XTS 5MHC33-B chiuso compact

Enclosure Modulbox XTS 5MHC33-B closed compact

Hitaltech
A group of connecting technologies

ITALTRONIC S.R.L.
VIA AUSTRIA 25/D 35127
PADOVA - ITALY
www.italtronic.com

Drawing nr.

M-05177-00

REVISIONE			
Rev. n°	Descrizione	Data	Eseguita da
1	Modificato parti gancio.Changed parts hook.	17/07/13	Rigato N.
2	Modificato parti gancio.Changed parts hook.	31/01/14	Rigato N.

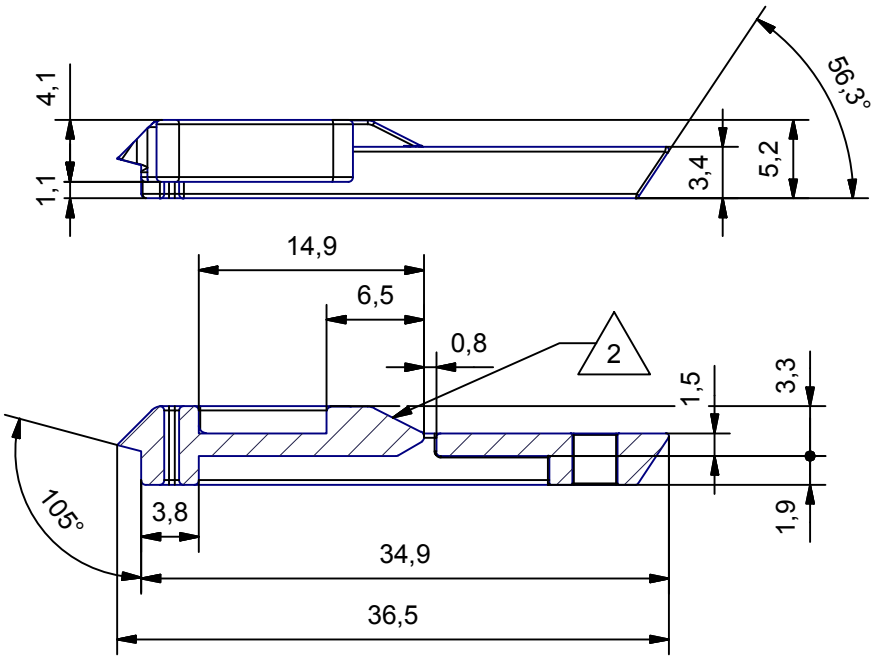

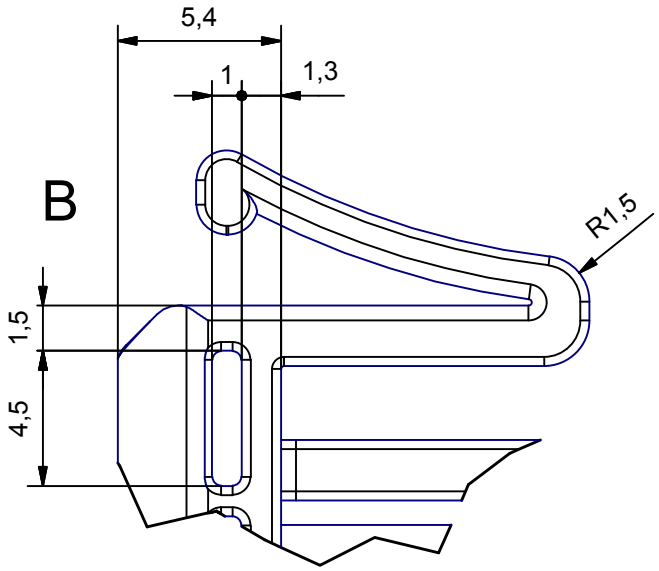

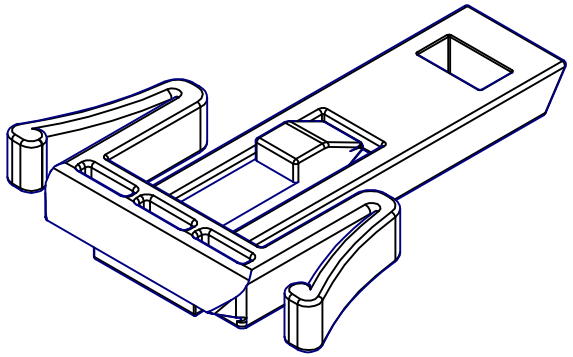

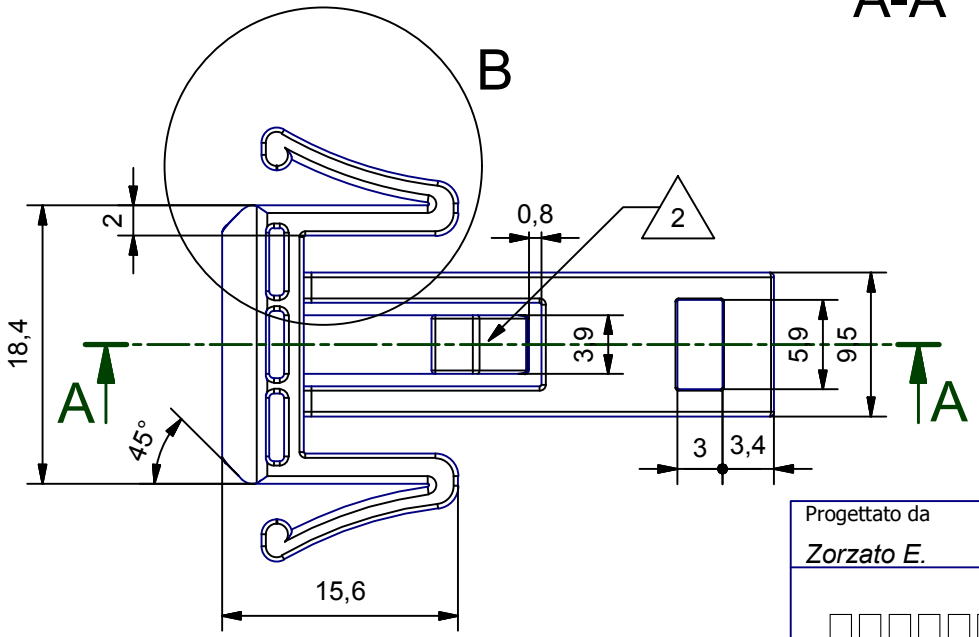

Tolleranze generali: ± 0.2 mm

Progettato da	Verificato da	Data	Sostituisce il
Zorzato E.	*Mazzucato F.*	12/03/2007	

□□□□□□□□□□□□□□□□□□□

□□□□□□ □□□□□□□□□□

Nuovo aggancio lungo MODULBOX

M-01900-02	Edizione 00	Foglio 1 / 1