MK5900

T-slot cylinder sensor

MKI3020-BPKG/A/AS

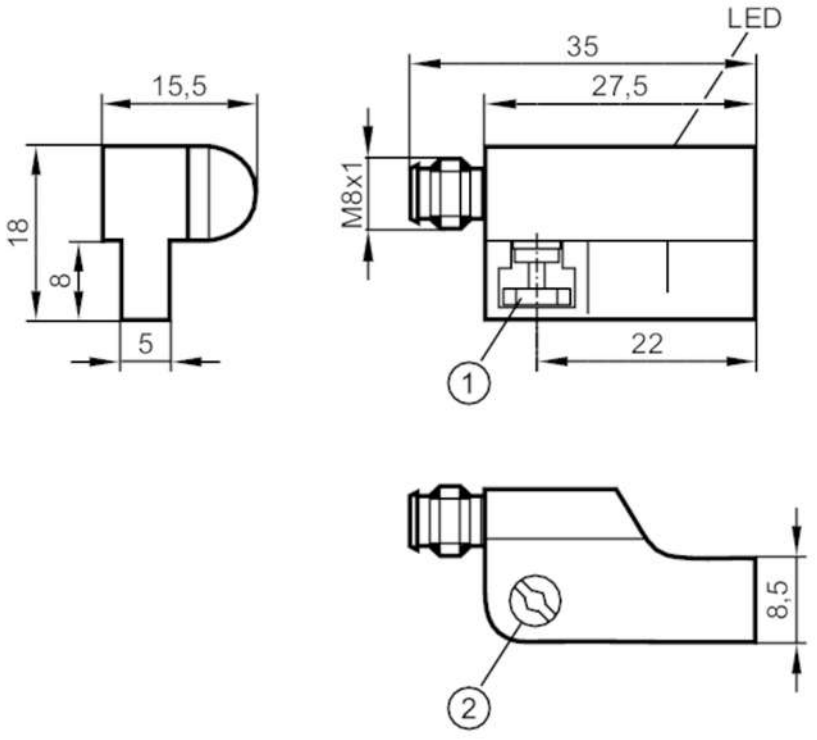

1 Fixing element
2 combined head screw for fixing element

Product characteristics		
Electrical design		PNP
Output function		normally open
Dimensions	[mm]	27.5 x 18 x 15.5
Electrical data		
Operating voltage	[V]	10...30 DC; ("supply class 2" to cULus)
Current consumption	[mA]	< 10
Protection class		III
Reverse polarity protection		yes
Max. power-on delay time	[ms]	30
Outputs		
Electrical design		PNP
Output function		normally open
Max. voltage drop switching output DC	[V]	2.5
Permanent current rating of switching output DC	[mA]	100
Switching frequency DC	[Hz]	6000
Short-circuit protection		yes
Overload protection		yes
Detection zone		
Response sensitivity	[mT]	2

MK5900

T-slot cylinder sensor

MKI3020-BPKG/A/AS

Travel speed	[m/s]	> 10	
Accuracy / deviations			
Hysteresis	[mm]	< 1	
Repeatability	[mm]	< 0.2	
Operating conditions			
Ambient temperature	[°C]	-25...85	
Protection		IP 65; IP 67	
Tests / approvals			
EMC		EN 61000-4-2 ESD	- CD / 8 kV AD
		EN 61000-4-3 HF radiated	10 V/m
		EN 61000-4-4 Burst	2 kV
		EN 61000-4-6 HF conducted	10 V
		EN 55011	class B
MTTF	[years]	1887	
Mechanical data			
Weight	[g]	12.4	
Mounting		non-flush mountable	
Type of mounting		fixing element with combined head slot / hexagon socket AF 1.5	
Cylinder type		T-slot cylinders	
Dimensions	[mm]	27.5 x 18 x 15.5	
Materials		housing: PA; Fixing element: stainless steel / brass	
Displays / operating elements			
Display		switching status	1 x LED, yellow
Accessories			
Items supplied		rubber placeholder: 1	
Remarks			
Pack quantity		1 pcs.	
Electrical connection - plug			

Connector: 1 x M8; coding: A; Locking: snap-fit



MK5900

T-slot cylinder sensor

MKI3020-BPKG/A/AS

Connection

