Brand of NTN Group

Technical data

MUCNFL207

Bearing units



Thermoplastic housing, stainless steel insert ball bearing with socket set screws, seal with slinger, food grease

KIT CONTENT

MUC207FD, NFL207

VISUAL (S)

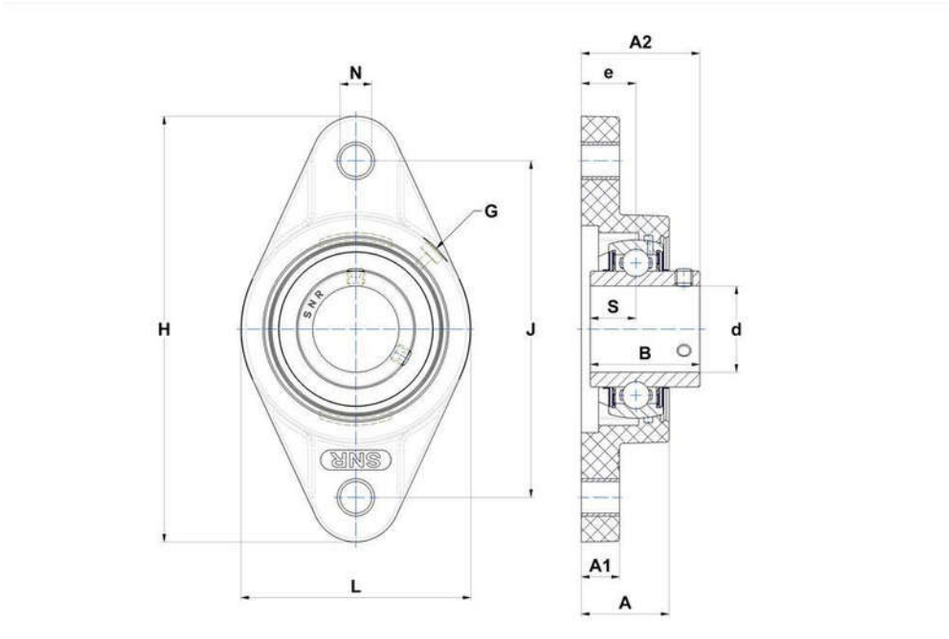

PRODUCT DEFINITION

Brand	SNR
A - Housing height	32,8 mm
A1 - Housing foot height / flange height	16,1 mm
A2 - Total height from mounting surface	43,4 mm
B - Width of Inner Ring	42,9 mm

MUCNFL207
Bearing units

PRODUCT DEFINITION	
d - Shaft diameter	35 mm
e - Distance mounting surface to bearing center	18 mm
G - Grease fitting	1/4"-28
H - Housing length, width or diameter	163 mm
J - Mounting holes distance	130 mm
L - Housing width / diameter	90 mm
N - Mounting hole dimension	13 mm
S - Distance front side/bearing centre	17,5 mm

PRODUCT PERFORMANCE	
C - Dynamic load rating	22000000 mN
C0 - Static load rating	12300000 mN
Operating temperature min.	253,15 °K
Operating temperature max.	373,15 °K

OTHER FEATURES	
Mass	0,66 kg
Recommended tightening torque for set screw	8.3 N-m