Length measuring kit mini measurement system | **Measuring wheel system, incl. encoder** | **Incremental**



Very compact mini measurement system with incremental interface.

Easy to install

- The measuring wheel, the sensor and the fastening are pre-assembled and thus easy to install:
  fix – connect – ready-to-go.

Compact construction

- Dimensions of the whole unit 74 x 50 x 52 mm.
- Measuring wheel circumference 100 mm.

Order code

05.2400.0040.1000.50	XX (a)

Resolution
0.1 mm

Cable outlet
radial cable, 2 m [6.56'] PVC

(a) *Measuring wheel*
45 = knurled aluminium
49 = rubber, Shure hardness 60

Technical data	
Maximum speed	2000 min^{-1}
Protection acc. to EN 60529	IP64
Output circuit	Push-pull with inverted signal
Power supply	8 ... 30 V DC
Current	≤ 20 mA
Load channel max.	20 mA
Output frequency max.	≥ 100 kHz

Dimensions

Dimensions in mm [inch]

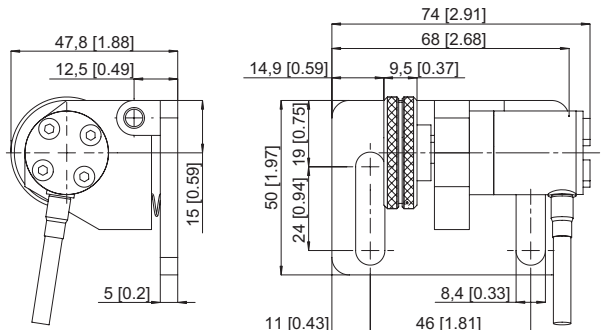

© Fritz Kübler GmbH, subject to errors and changes. 02/2015