DC axial compact fan



ebm-papst St. Georgen GmbH & Co. KG
Hermann-Papst-Str. 1
D-78112 St. Georgen
Phone +49 (0) 7724 81-0
Fax +49 (0) 7724 81-1309
info2@de.ebmpapst.com
www.ebmpapst.com

Nominal data

Type	4182 NX	
Nominal voltage	VDC	12
Nominal voltage range	VDC	6 .. 15
Speed	min^{-1}	3200
Power input	W	4.9
Min. ambient temperature	°C	-30
Max. ambient temperature	°C	75
Air flow	m^3/h	180
Sound power level	B	5.7
Sound pressure level	dB(A)	49

ml = Max. load · me = Max. efficiency · fa = Running at free air · cs = Customer specs · cu = Customer unit
Subject to alterations

DC axial compact fan

Technical features

Impeller material	Fibreglass-reinforced plastic (PA)
Mass	0.390 kg
Dimensions	119 x 119 x 38 mm
Housing material	Die-cast aluminium
Direction of air flow	Inlet over bars
Direction of rotation	Clockwise, looking at rotor
Bearing	Ball bearings
Lifetime L10 at 40 °C	85000 h
Lifetime L10 at maximum temperature	37500 h
Connection line	Flat plugs 2.8 x 0.5 mm. Optionally also available with strands.
Motor protection	Protected against reverse polarity and locking.
Approval	VDE, CSA, UL

ebm-papst St. Georgen GmbH & Co. KG · Hermann-Papst-Str. 1 · D-78112 St. Georgen · Phone +49 (0) 7724 81-0 · Fax +49 (0) 7724 81-1309 · info2@de.ebmpapst.com · www.ebmpapst.com

DC axial compact fan

Product drawing

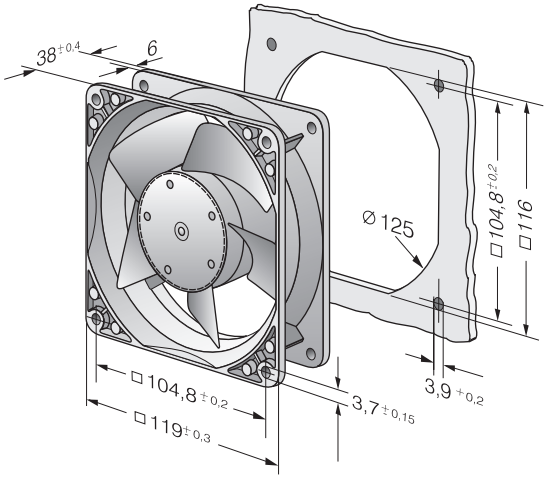

ebm-papst St. Georgen GmbH & Co. KG · Hermann-Papst-Str. 1 · D-78112 St. Georgen · Phone +49 (0) 7724 81-0 · Fax +49 (0) 7724 81-1309 · info2@de.ebmpapst.com · www.ebmpapst.com

DC axial compact fan

Charts: Air flow

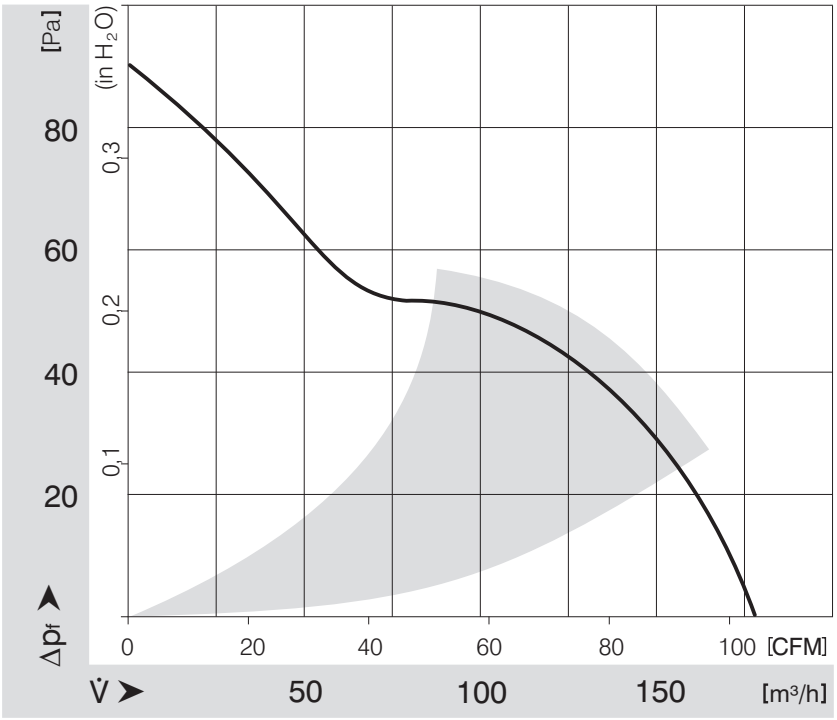

ebm-papst St. Georgen GmbH & Co. KG · Hermann-Papst-Str. 1 · D-78112 St. Georgen · Phone +49 (0) 7724 81-0 · Fax +49 (0) 7724 81-1309 · info2@de.ebmpapst.com · www.ebmpapst.com