# 7207 BECBP

Popular item
SKF Explorer

## Dimensions

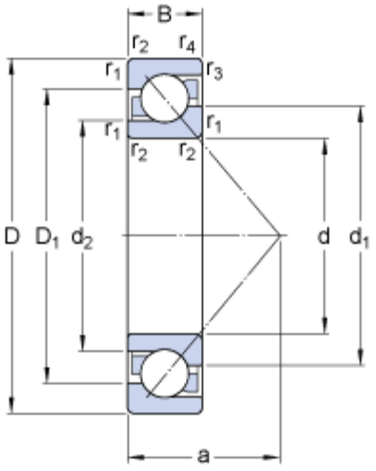


| | | | |
|---|---|---|---|
| d | | 35 | mm |
| D | | 72 | mm |
| B | | 17 | mm |
| $d_1$ | ≈ | 49.65 | mm |
| $d_2$ | ≈ | 41.96 | mm |
| $D_1$ | ≈ | 58.25 | mm |
| a | | 31 | mm |
| $r_{1,2}$ | min. | 1.1 | mm |
| $r_{3,4}$ | min. | 0.6 | mm |

## Abutment dimensions

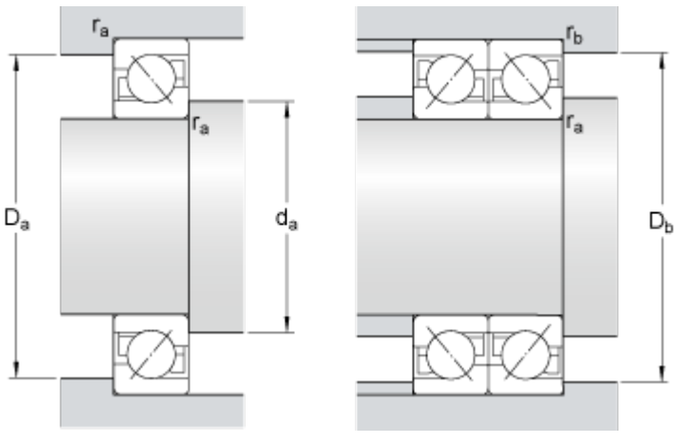


| | | | |
|---|---|---|---|
| $d_a$ | min. | 42 | mm |
| $D_a$ | max. | 65 | mm |
| $D_b$ | max. | 67.8 | mm |
| $r_a$ | max. | 1 | mm |
| $r_b$ | max. | 0.6 | mm |

## Calculation data

| | | | |
|---|---|---|---|
| Basic dynamic load rating | C | 31 | kN |
| Basic static load rating | $C_0$ | 20.8 | kN |
| Fatigue load limit | $P_u$ | 0.88 | kN |
| Reference speed | | 11000 | r/min |
| Limiting speed | | 12000 | r/min |
| Calculation factor | A | 0.00674 | |
| Calculation factor | $k_r$ | 0.095 | |
| Calculation factor | e | 1.14 | |

### Single bearing or bearing pair arranged in tandem

| | | | |
|---|---|---|---|
| Calculation factor | X | 0.35 | |

| | | |
|---|---|---|
| Calculation factor | $Y_0$ | 0.26 |
| Calculation factor | $Y_2$ | 0.57 |

**Bearing pair arranged back-to-back or face-to-face**

| | | |
|---|---|---|
| Calculation factor | X | 0.57 |
| Calculation factor | $Y_0$ | 0.52 |
| Calculation factor | $Y_1$ | 0.55 |
| Calculation factor | $Y_2$ | 0.93 |

## Mass

| | | |
|---|---|---|
| Mass bearing | 0.28 | kg |