

TECHNICAL OVERVIEW

P9164A/B/C 2X16 & P9165A/B/C 2X8 USB Solid State Switch Matrix

300 kHz to 6.5/9/18 GHz

Compact Form. Zero Compromise

- Choose frequency ranges from 300 KHz up to 18 GHz
- Extend the number of test ports for multi-DUT or multiport devices measurement
- Portable and easily share the compact switch matrix between your location
- Achieve lower cost-per-port test without compromising performance and bench space

Description

Keysight P916x A/B/C 2X8/16 USB solid state switch matrix, 300 KHz to 6.5/9/18 GHz is a full-crossbar switch matrix. It works seamlessly with Keysight's P50xxA streamline series of VNA solution in providing a switch based multiport VNA solution in the form of compact USB controlled involving larger scale of multi-DUT or multiport measurement such as 5G massive MIMO antenna measurement.

The P916xA/B/C is compact and portable. Together with exceptional RF performance, it delivers confidence in your measurement for a reliable and repeatable results while at the same time reducing the overall cost of test.

KEYSIGHT TECHNOLOGIES

Block Diagram

Keysight P9164x are 2 slot USB 2x16 solid state switch modules whereas P9165x are 1 slot USB 2x8 solid state switch modules. They are designed to provide switch based multiport VNA solution and can also be used as a generic standalone switching solution, operating from 300kHz to up to 18GHz. The switch is configured as either 2x8 (2 in, 8 out) or 2x16 (2 in, 16 out) full-crossbar switch and consists of multiple SPDT and SP4T CMOS switches for fast switching. Switching can be done via the Soft Front Panel (provided) or IVI commands, executed from the host computer. A driver circuitry provides the necessary decoding to switch to the selected paths. At any time, 2 RF paths would be in the ON state, connected to user selected output ports, while the rest of the ports will be in an ISOLATION state. Output ports that are not switched will be internally terminated to 50 ohms.

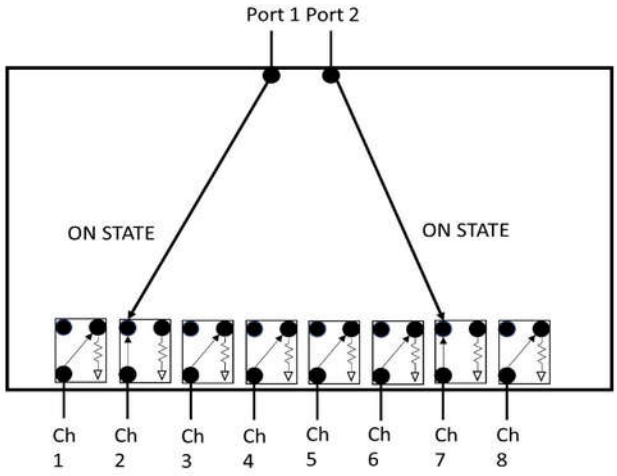

Figure 1. Simplified block diagram of 2X8 switch matrix

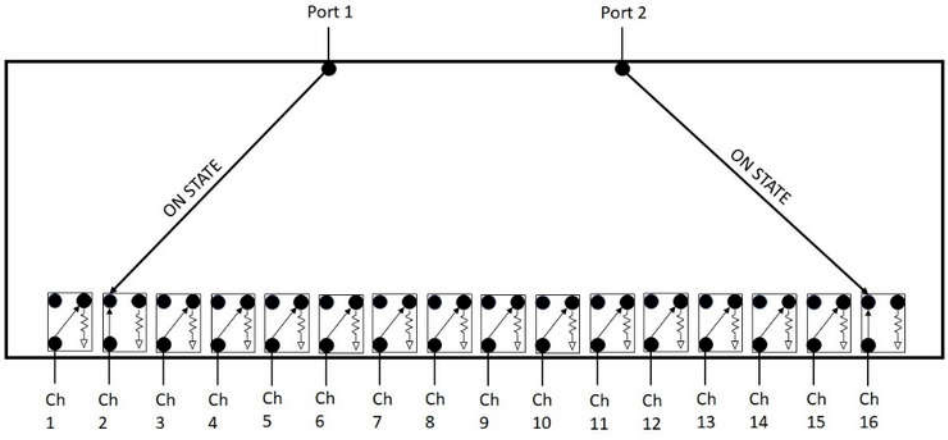

Figure 2. Simplified block diagram of 2X16 switch matrix

Specifications

Specifications describe the instrument's warranted performance. Supplemental and typical characteristics are intended to provide information useful in applying the instrument by giving typical, but not warranted performance parameters

P9164A/B/C 2X16 USB Solid State Switch Matrix

Specification	P9164A	P9164B	P9164C
Operating Frequency	300 kHz to 6.5 GHz	300 kHz to 9 GHz	300 kHz to 18 GHz
Configuration	2X16 full crossbar	2X16 full crossbar	2X16 full crossbar
Isolation (dB)	300 kHz to 2 GHz: 87 2 to 6.5 GHz: 85	300 kHz to 2 GHz: 87 2 to 9 GHz: 85	300 kHz to 2 GHz: 87 2 to 15 GHz: 85 15 to 18 GHz: 77
Insertion loss (dB) Port 1 to CH9, CH10, CH11, CH12, CH13, CH14, CH15, CH16 and Port 2 to CH1, CH2, CH3, CH4, CH5, CH6, CH7, CH8	300 kHz to 2 MHz: 3.7 2 MHz to 100 MHz: 3.5 100 MHz to 2 GHz: 5.1 2 to 4 GHz: 6.8 4 to 6.5 GHz: 8.6	300 kHz to 2 MHz: 3.7 2 MHz to 100 MHz: 3.5 100 MHz to 2 GHz: 5.1 2 to 4 GHz: 6.8 4 to 6.5 GHz: 8.6 6.5 to 8 GHz: 9.9 8 to 9 GHz: 10.6	300 kHz to 2 MHz: 3.7 2 MHz to 100 MHz: 3.5 100 MHz to 2 GHz: 5.1 2 to 4 GHz: 6.8 4 to 6.5 GHz: 8.6 6.5 to 8 GHz: 9.9 8 to 9 GHz: 10.6 9 to 12.5 GHz: 12.6 12.5 to 15 GHz: 14.3 15 to 17 GHz: 15.3 17 to 18 GHz: 16
Insertion loss (dB) Port 2 to CH9, CH10, CH11, CH12, CH13, CH14, CH15, CH16 and Port 1 to CH1, CH2, CH3, CH4, CH5, CH6, CH7, CH8	300 kHz to 2 MHz: 3.7 2 MHz to 100 MHz: 3.5 100 MHz to 2 GHz: 5 2 to 4 GHz: 6.8 4 to 6.5 GHz: 8.4	300 kHz to 2 MHz: 3.7 2 MHz to 100 MHz: 3.5 100 MHz to 2 GHz: 5 2 to 4 GHz: 6.8 4 to 6.5 GHz: 8.4 6.5 to 8 GHz: 9.2 8 to 9 GHz: 10	300 kHz to 2 MHz: 3.7 2 MHz to 100 MHz: 3.5 100 MHz to 2 GHz: 5 2 to 4 GHz: 6.8 4 to 6.5 GHz: 8.4 6.5 to 8 GHz: 9.2 8 to 9 GHz: 10 9 to 12.5 GHz: 11.3 12.5 to 15 GHz: 12.7 15 to 17 GHz: 14.3 17 to 18 GHz: 14.5
Return loss (Port 1/2 ON) (dB) Port 1 to CH9, CH10, CH11, CH12, CH13, CH14, CH15, CH16 and Port 2 to CH1, CH2, CH3, CH4, CH5, CH6, CH7, CH8	300 kHz to 2 MHz: 7.0 2 MHz to 100 MHz: 8.0 100 MHz to 3 GHz: 8.9 3 to 6.5 GHz: 9.7	300 kHz to 2 MHz: 7.0 2 MHz to 100 MHz: 8.0 100 MHz to 3 GHz: 8.9 3 to 6.5 GHz: 9.7 6.5 to 9 GHz: 8.4	300 kHz to 2 MHz: 7.0 2 MHz to 100 MHz: 8.0 100 MHz to 3 GHz: 8.9 3 to 6.5 GHz: 9.7 6.5 to 9 GHz: 8.4 9 to 10.5 GHz: 8 10.5 to 12 GHz: 7.9 12 to 13.5 GHz: 8.6 13.5 to 17 GHz: 6.4 17 to 18 GHz: 7.4

P9164A/B/C 2X16 USB Solid State Switch Matrix (continue)

Specification	P9164A	P9164B	P9164C
Return loss (Port 1/2 ON) (dB) Port 2 to CH9, CH10, CH11, CH12, CH13, CH14, CH15, CH16 and Port 1 to CH1, CH2, CH3, CH4, CH5, CH6, CH7, CH8	300 kHz to 2 MHz: 7.0 2 MHz to 100 MHz: 8.0 100 MHz to 3 GHz: 8.9 3 to 6.5 GHz: 9.7	300 kHz to 2 MHz: 7.0 2 MHz to 100 MHz: 8.0 100 MHz to 3 GHz: 8.9 3 to 6.5 GHz: 9.7 6.5 to 9 GHz: 8.4	300 kHz to 2 MHz: 7.0 2 MHz to 100 MHz: 8.0 100 MHz to 3 GHz: 8.9 3 to 6.5 GHz: 9.7 6.5 to 9 GHz: 8.4 9 to 10.5 GHz: 8 10.5 to 12 GHz: 7.9 12 to 13.5 GHz: 8.6 13.5 to 17 GHz: 6.4 17 to 18 GHz: 7.4
Return loss (CHx port, ON) (dB) Port 1 to CH9, CH10, CH11, CH12, CH13, CH14, CH15, CH16 and Port 2 to CH1, CH2, CH3, CH4, CH5, CH6, CH7, CH8	300 kHz to 2 MHz: 7.0 2 MHz to 100 MHz: 8.0 100 MHz to 5 GHz: 8.9 5 to 5.5 GHz: 8.2 5.5 to 6.5 GHz: 10.1	300 kHz to 2 MHz: 7.0 2 MHz to 100 MHz: 8.0 100 MHz to 5 GHz: 8.9 5 to 5.5 GHz: 8.2 5.5 to 6.5 GHz: 10.1 6.5 to 7 GHz: 10.1 7 to 8 GHz: 9.6 8 to 9 GHz: 9.6	300 kHz to 2 MHz: 7.0 2 MHz to 100 MHz: 8.0 100 MHz to 5 GHz:8.9 5 to 5.5 GHz: 8.2 5.5 to 7 GHz: 10.1 7 to 9 GHz: 9.6 9 to 10.5 GHz: 6.1 10.5 to 12 GHz: 5.6 12 to 16 GHz: 6.6 16 to 18 GHz: 6
Return loss (CHx port, ON) (dB) Port 2 to CH9, CH10, CH11, CH12, CH13, CH14, CH15, CH16 and Port 1 to CH1, CH2, CH3, CH4, CH5, CH6, CH7, CH8	300 kHz to 2 MHz: 7.0 2 MHz to 100 MHz: 8.0 100 MHz to 5 GHz: 8.9 5 to 5.5 GHz: 8.2 5.5 to 6.5 GHz: 10.1	300 kHz to 2 MHz: 7.0 2 MHz to 100 MHz: 8.0 100 MHz to 5 GHz: 8.9 5 to 5.5 GHz: 8.2 5.5 to 6.5 GHz: 10.1 6.5 to 7 GHz: 10.1 7 to 8 GHz: 9.6 8 to 9 GHz: 9.6	300 kHz to 2 MHz: 7.0 2 MHz to 100 MHz: 8.0 100 MHz to 5 GHz:8.9 5 to 5.5 GHz: 8.2 5.5 to 7 GHz: 10.1 7 to 9 GHz: 9.6 9 to 10.5 GHz: 6.1 10.5 to 12 GHz: 5.6 12 to 16 GHz: 6.6 16 to 18 GHz: 6
Return loss (CHx port, OFF) (dB)	300 kHz to 2 MHz: 12.0 2 MHz to 100 MHz: 12.0 100 MHz to 4 GHz: 13.4 4 to 6.5 GHz: 12.4	300 kHz to 2 MHz: 12.0 2 MHz to 100 MHz: 12.0 100 MHz to 4 GHz: 13.4 4 to 6.5 GHz: 12.4 6.5 to 8 GHz: 14 8 to 9 GHz: 11.0	300 kHz to 2 MHz: 12.0 2 MHz to 100 MHz: 12.0 100 MHz to 4 GHz: 13.4 4 to 6.5 GHz: 12.4 6.5 to 8 GHz: 14 8 to 9 GHz: 11.0 9 to 10.5 GHz: 9.4 10.5 to 14 GHz: 6 14 to 18 GHz: 5
Typical Temperature Stability - 20 to 30°C (Magnitude dB/°C)	300 kHz to 3 GHz: 0.002 3 to 6.5 GHz: 0.003 6.5 to 11 GHz: 0.004 11 to 15 GHz: 0.006 15 to 18 GHz: 0.008		
Typical Temperature Stability - 20 to 30°C (Phase Degree/°C)	300 kHz to 3 GHz: 0.02 3 to 6.5 GHz: 0.03 6.5 to 11 GHz: 0.05 11 to 15 GHz: 0.07 15 to 18 GHz: 0.10		

P9165A/B/C 2X8 USB Solid State Switch Matrix

Specification	P9165A	P9165B	P9165C
Operating Frequency	300 kHz to 6.5 GHz	300 kHz to 9 GHz	300 kHz to 18 GHz
Configuration	2X8 full crossbar	2X8 full crossbar	2X8 full crossbar
Isolation (dB)	300 kHz to 1 GHz: 90 1 to 6.5 GHz: 88	300 kHz to 1 GHz: 90 1 to 9 GHz: 88	300 kHz to 2 GHz: 90 2 to 10 GHz: 88 10 to 15 GHz: 85 15 to 18 GHz: 80
Insertion loss (dB) Port 1 to CH5, CH6, CH7, CH8 and Port 2 to CH1, CH2, CH3, CH4	300 kHz to 2 MHz: 3.7 2 MHz to 1 GHz: 4.3 1 to 3 GHz: 5.7 3 to 6.5 GHz: 7.2	300 kHz to 2 MHz: 3.7 2 MHz to 1 GHz: 4.3 1 to 3 GHz: 5.7 3 to 6.5 GHz: 7.2 6.5 to 9 GHz: 9.2	300 kHz to 2 MHz: 3.7 2 MHz to 1 GHz: 4.3 1 to 3 GHz: 5.7 3 to 6.5 GHz: 7.2 6.5 to 10 GHz: 9.4 10 to 13 GHz: 11.5 13 to 15 GHz: 13.5 15 to 16.5 GHz: 16.5 16.5 to 18 GHz: 16.2
Insertion loss (dB) Port 1 to CH1, CH2, CH3, CH4 and Port 2 to CH5, CH6, CH7, CH8	300 kHz to 2 MHz: 3.7 2 MHz to 1 GHz: 4.3 1 to 3 GHz: 5.7 3 to 6.5 GHz: 7.2	300 kHz to 2 MHz: 3.7 2 MHz to 1 GHz: 4.3 1 to 3 GHz: 5.7 3 to 6.5 GHz: 7.2 6.5 to 9 GHz: 9.2	300 kHz to 2 MHz: 3.7 2 MHz to 1 GHz: 4.3 1 to 3 GHz: 5.7 3 to 6.5 GHz: 7.2 6.5 to 10 GHz: 9.4 10 to 13 GHz: 11.2 13 to 15 GHz: 12.5 15 to 16.5 GHz: 13.5 16.5 to 18 GHz: 14.2
Return loss (Port 1/2 ON) (dB) Port 1 to CH5, CH6, CH7, CH8 and Port 2 to CH1, CH2, CH3, CH4	300 kHz to 2 MHz: 7.0 2 MHz to 6.5 GHz: 11.7	300 kHz to 2 MHz: 7.0 2 MHz to 6.5 GHz: 11.7 6.5 to 9 GHz: 10.2	300 kHz to 2 MHz: 7.0 2 MHz to 8 GHz: 11.7 8 to 10 GHz: 10.2 10 to 13 GHz: 7.7 13 to 15 GHz: 6.7 15 to 16.5 GHz: 4.5 16.5 to 18 GHz: 5.2
Return loss (Port 1/2 ON) (dB) Port 1 to CH1, CH2, CH3, CH4 and Port 2 to CH5, CH6, CH7, CH8	300 kHz to 2 MHz: 7.0 2 MHz to 6.5 GHz: 12	300 kHz to 2 MHz: 7.0 2 MHz to 6.5 GHz: 12 6.5 to 9 GHz: 10	300 kHz to 2 MHz: 7.0 2 MHz to 8 GHz: 12 8 to 10 GHz: 10 10 to 13 GHz: 8.7 13 to 15 GHz: 7.7 15 to 16.5 GHz: 6 16.5 to 18 GHz: 6.5

P9165A/B/C 2X8 USB Solid State Switch Matrix (continue)

Specification	P9165A	P9165B	P9165C
Return loss (CHx port, ON) (dB) Port 1 to CH5, CH6, CH7, CH8 and Port 2 to CH1, CH2, CH3, CH4	300 kHz to 2 MHz: 7.0 2 MHz to 6.5 GHz: 11.7	300 kHz to 2 MHz: 7.0 2 MHz to 6.5 GHz: 11.7 6.5 to 9 GHz: 9.7	300 kHz to 2 MHz: 7.0 2 MHz to 6.5 GHz: 11.7 6.5 to 10 GHz: 9.7 10 to 11.5 GHz: 9 11.5 to 13.5 GHz: 8.7 13.5 to 15 GHz: 6.7 15 to 16.5 GHz: 4.2 16.5 to 18 GHz: 5.2
Return loss (CHx port, ON) (dB) Port 1 to CH1, CH2, CH3, CH4 and Port 2 to CH5, CH6, CH7, CH8	300 kHz to 2 MHz: 7.0 2 MHz to 6.5 GHz: 11.7	300 kHz to 2 MHz: 7.0 2 MHz to 6.5 GHz: 11.7 6.5 to 9 GHz: 10	300 kHz to 2 MHz: 7.0 2 MHz to 6.5 GHz: 11.7 6.5 to 10 GHz: 8.7 10 to 11.5 GHz: 8.7 11.5 to 13.5 GHz: 9.7 13.5 to 15 GHz: 6.2 15 to 18 GHz: 5.7
Return loss (CHx port, OFF) (dB)	300 kHz to 2 MHz: 10.0 2 MHz to 6.5 GHz: 12.7	300 kHz to 2 MHz: 10.0 2 MHz to 6.5 GHz: 12.7 6.5 to 9 GHz: 9.7	300 kHz to 2 MHz: 10.0 2 MHz to 8.5 GHz: 12.5 8.5 to 11 GHz: 8.7 11 to 14 GHz: 10.7 14 to 17 GHz: 5.5 17 to 18 GHz: 6.5
Typical Temperature Stability - 20 to 30°C (Magnitude dB/°C)	300 kHz to 8 GHz: 0.002 8 to 11 GHz: 0.003 11 to 18 GHz: 0.007		
Typical Temperature Stability - 20 to 30°C (Phase Degree/°C)	300 kHz to 8 GHz: 0.02 8 to 11 GHz: 0.03 11 to 18 GHz: 0.03		

P916xA/B/C 2X8/16 USB Solid State Switch Matrix Supplemental Specification and Characteristics

Supplemental characteristics are intended to provide useful information. They are typical but non-warranted performance parameters

Specification	P916xA/B/C
Maximum input power	25 dBm
Typical switching speed (10% trigger to 90% output)	50 us
Typical input P1dB	25 dBm
Typical input TOI	54 dBm
RF connector	SMA (f)

Environmental Specifications

Keysight P916xA/B/C USB solid state switch matrix are designed for indoor use and in an area with low condensation. They are fully complying with Keysight Technologies' product operating environmental specifications. The following summarizes the environmental specifications for these products.

Environmental specifications	Description
Temperature	
Operating	0 °C to +40 °C
Storage	-40 °C to +70 °C
Humidity	
Operating	95% RH at 40 °C (non-condensing)
Shock	
End-user handling	Delta V: 3 m/s (60 in/s) ±5%, Duration <3ms
Transportation	50G, Delta V: 8m/s ±10%
Vibration	
Operating	Random: 0.3 Grms
Survival	Random: 2.41 Grms
ESD immunity	
Contact discharge	8 kV per IEC 61000-4-2
Air discharge	20 kV per IEC 61000-4-2
Altitude	
Operating	< 3,000 meters (< 9,842 feet)
Radiated Emissions	CISPR11/EN 55011
Conducted Emissions	
Radiated Immunity	IEC/EN 61000-4-3 IEC 61000-6-1 (S. Korea requirement for KC)
Conducted immunity	IEC/EN 61000-4-6
Surge on AC power line immunity	IEC/EN 61000-4-5
Electrical fast transient (EFT) immunity	IEC/EN 61000-4-4
Voltage dips and interrupts on A.C. power line immunity	IEC/EN 61000-4-11
Electrostatic discharge (ESD) immunity	IEC/EN 61000-4-2
Power frequency magnetic Field immunity test	IEC/EN 61000-4-8
Mains Supply Input Test/ Sound Pressure Test/ Single Fault Conditions/ Temperature Test	IEC/EN 61010-1 3rd Ed

Mechanical Information

Dimensions are in mm (inches) nominal, unless otherwise specified

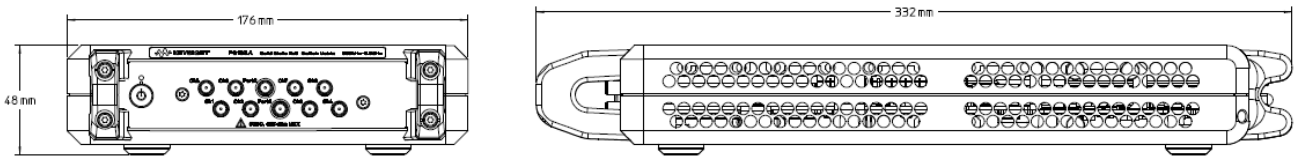

P9165A/B/C product dimensions (SMA (f) connectors)	
Net weight	1.92 kg
Dimension (H x W x D)	48 mm x 176 mm x 332 mm (1.89 inches x 6.93 inches x 13.07 inches)

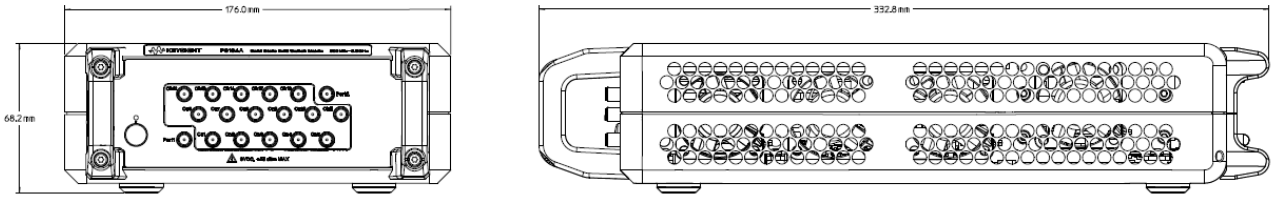

P9164A/B/C product dimensions (SMA (f) connectors)	
Net weight	2.65 kg
Dimension (H x W x D)	68.2 mm x 176 mm x 332.8mm (2.69 inches x 6.93 inches x 13.10 inches)

Ordering Information

Description	
P9164A	2X16 USB Solid State Switch Matrix, 300 KHz to 6.5 GHz
P9164B	2X16 USB Solid State Switch Matrix, 300 KHz to 9 GHz
P9164C	2X16 USB Solid State Switch Matrix, 300 KHz to 18 GHz
P9165A	2X8 USB Solid State Switch Matrix, 300 KHz to 6.5 GHz
P9165B	2X8 USB Solid State Switch Matrix, 300 KHz to 9 GHz
P9165C	2X8 USB Solid State Switch Matrix, 300 KHz to 18 GHz

Web link

www.keysight.com/find/solidstateswitch

More RF & Microwave Test Accessories

For selection of more than 300 models of various type of RF and microwave test accessories with operating frequency up to 110 GHz. Go to: www.keysight.com/find/mta

Learn more at: www.keysight.com

For more information on Keysight Technologies' products, applications or services, please contact your local Keysight office. The complete list is available at: www.keysight.com/find/contactus

KEYSIGHT TECHNOLOGIES

This information is subject to change without notice. © Keysight Technologies, 2020, Published in USA, October 23, 2020, 3120-1110.EN