Revolution- or Stroke Counters

Types 101/103 301/309



surface-mounting



flush-mounting



without housing

- 4- or 5 digit display
- Without reset
- With or without case
- Miniature size

CASE

Counters in this series are available with surface-mounting case, with flush-mounting case or without any housing.

TECHNICAL DATA

Display	4 or 5-digit, depending on version
Digit height	4.2 mm
Mounting	depending on version
Case	plastic (POM) black
Weight	approx. 5 g, with case approx. 9 g
Counting mode	Revolution counter: + (-) adding in the specified direction, subtracting in reverse direction. Stroke Counter: + is fixed, adding
Transmission ratio	1:1 or 1:10, depending on version
Max. speed	Revolution counter: 1.000 rpm, at a transmission ratio of 1:10 max. 100 rpm. Stroke counter: max. 500 strokes/min., switching distance min. 46°, max. 49°
Torque	Revolution counter: 0.05 Ncm, Stroke counter: 1.0 Ncm
Reset	none

DIMENSIONS
Type 101/301
surface-mounting case

Type 101/301 surface mounting case

	A	B
4	19.5	18.5
5	22.5	21.5

Type 101/301 without case

	A	B	C
4	13.5	15.5	17.6
5	16.5	18.5	20.6

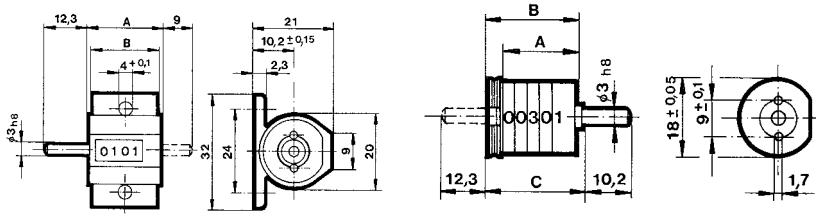

Dimensions in mm

Types 101/103 301/309

Technical data

DIMENSIONS
Typ 103/309 flush mounting case

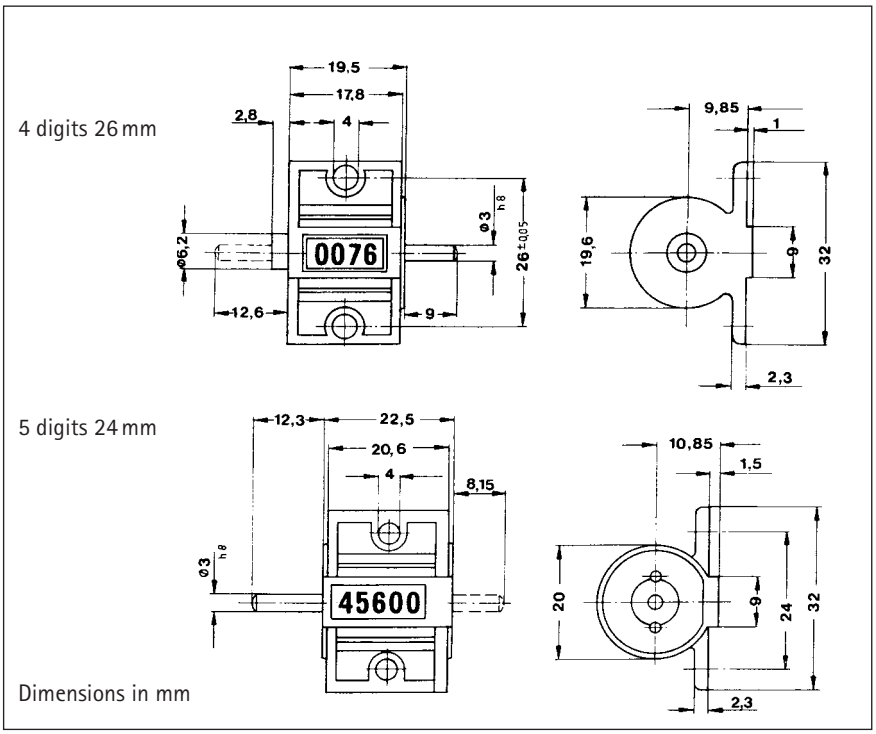

ORDER INFORMATION
Revolution Counters

Ratio	Case	Number of digits	Actuation/sense of rotation Bz	Bw	Bz	Bw
1:1	Surface	4	0 101 605	0 101 606*	0 101 607	0 101 608
		5	0 101 609	0 101 610	0 101 611*	0 101 612*
	flush	4	0 103 605	0 103 606	0 103 607	0 103 608
		5	–	–	–	–
1:10	Surface	4	0 101 505	0 101 506	0 101 507	0 101 508
		5	0 101 613	0 101 614*	0 101 615*	0 101 616
	flush	4	0 103 505	0 103 506	0 103 507	0 103 508

Stroke Counter

Case	Number of digits	Actuation/sense of rotation Bz	Bw	Bz	Bw
Surface	4	0 301 505	0 301 506	0 301 507	0 301 508
	5	0 301 509	0 301 510	0 301 511	0 301 512
flush	4	0 309 505*	0 309 506*	0 309 507*	0 309 508*
	5	0 309 509	0 309 510*	0 309 511*	0 309 512*
without	4	0 301 401*	–	–	–
	5	0 301 405*	–	0 301 407*	0 301 408*

Stroke lever 0 600 007

For further stroke levers see accessories

* on request
Inquire for other versions