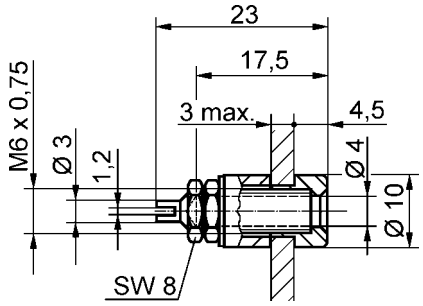

Socket
- fully insulated fitting
- insulated head screwed on
- hole ø 7.5 mm

order no. **IBU 401 / ..** (colour)

- contact part material	brass
- contact part	**nickel-plated**
- insulation	PA 6 (Polyamid)
colours:	see table

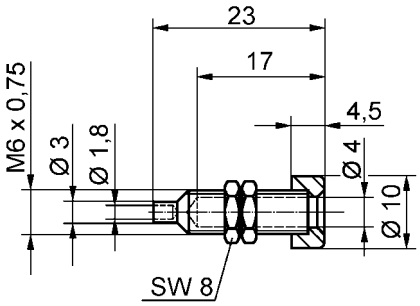

Socket
- insulated head screwed on
- hole ø 6.1 mm

order no. **IBU 403 / ..** (colour)

- contact part material	brass
- contact part	**nickel-plated**
- insulation	PA 6 (Polyamid)
colours:	see table

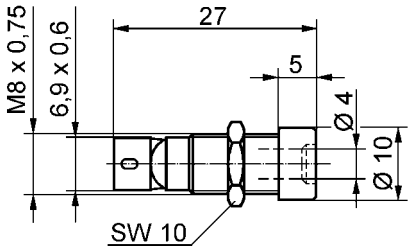

Socket
- insulated
- hole ø 8 mm

order no. **IBU 9213 / ..** (colour)

- contact part material	rolled brass sheet
- contact part	**tin-plated**
- insulation	ABS

General information			Technical data				
order no.	**max. torque for nuts**	**colours**	**terminal**	transition resistance	rated voltage	rated current	operating temperature
IBU 401 / .. (colour) contact part nickel-plated	300 Ncm	black, red, blue, yellow, green,white	soldering, solder loop	< 10 mΩ	30 V_{AC} 60 V_{DC}	32 A	- 25 °C ... + 80 °C
IBU 403 / .. (colour) contact part nickel-plated	300 Ncm			< 10 mΩ	30 V_{AC} 60 V_{DC}	32 A	- 25 °C ... + 80 °C
IBU 9213 / .. (colour) contact part tin-plated	100 Ncm	black red	soldering, cable lug	< 10 mΩ	30 V_{AC} 60 V_{DC}	16 A	- 30 °C ... + 90 °C

other types and platings on request

The information published has been compiled as carefully as possible. It is subject to alteration without notice in technical as well as in price related/commercial respect.