THE INFORMATION CONTAINED IN THIS DRAWING IS THE SOLE PROPERTY OF L-COM, INC. ANY REPRODUCTION IN PART OR WHOLE WITHOUT THE WRITTEN PERMISSION OF L-COM, INC. IS PROHIBITED.

REVISIONS			
REV	DESCRIPTION	DATE	APPROVED
A	INITIAL RELEASE	11/19/2012	D.GRIFFIN
B	ECN 6661: UPDATED PKG TO 10 PER BAG AND DRAWING # TO ECF-XLR-10	01/31/2013	D.DESJARDIN
C	ECN 6771: UPDATED SLOT DIMENSIONS ON SECTION A-A	04/03/2013	D.DESJARDIN
D	ECN 9293: ADDED RECOMMENDED PANEL CUTOUT, REVISED NOTES	07/09/2018	DFRISIELLO

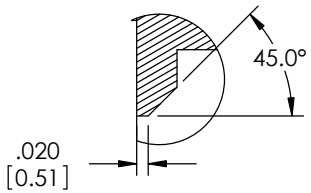

DETAIL C
SCALE 3 : 1

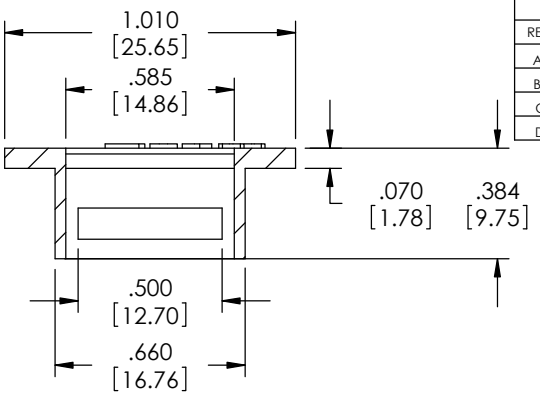

SECTION B-B

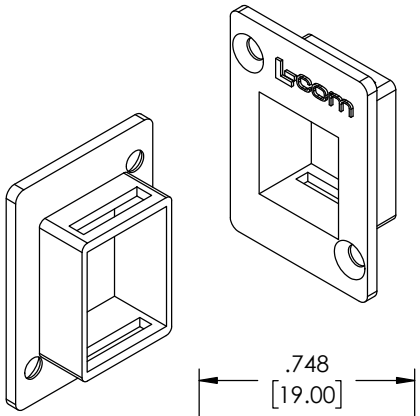

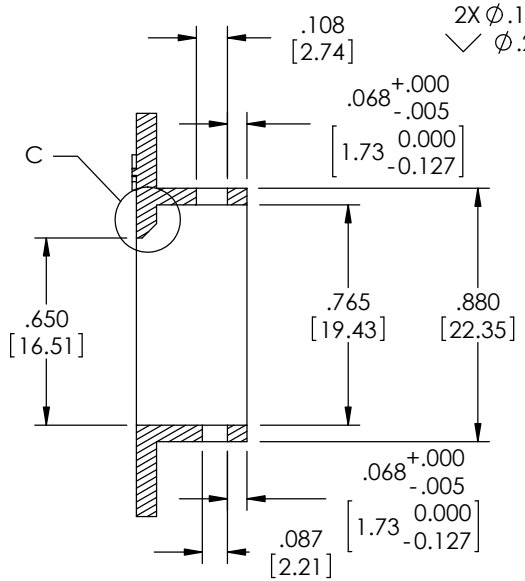

SECTION A-A

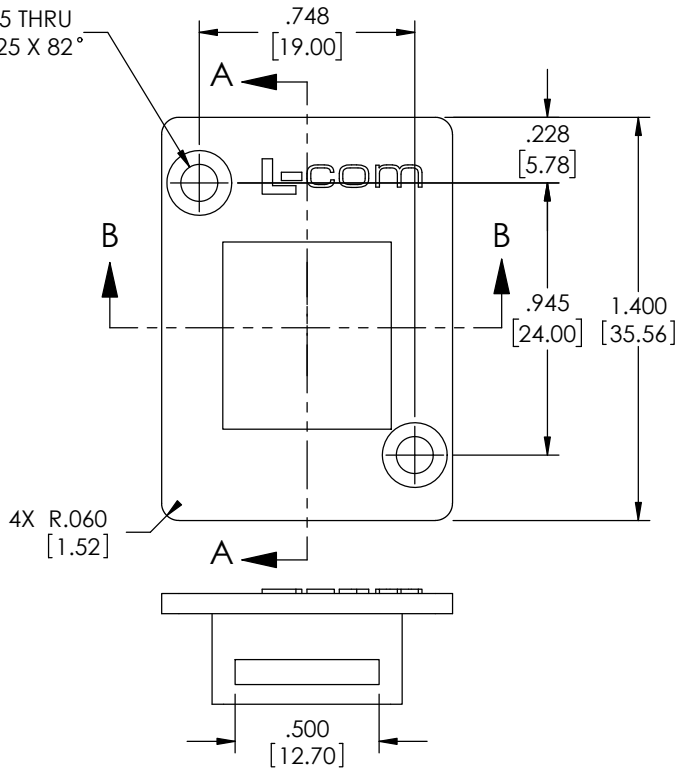

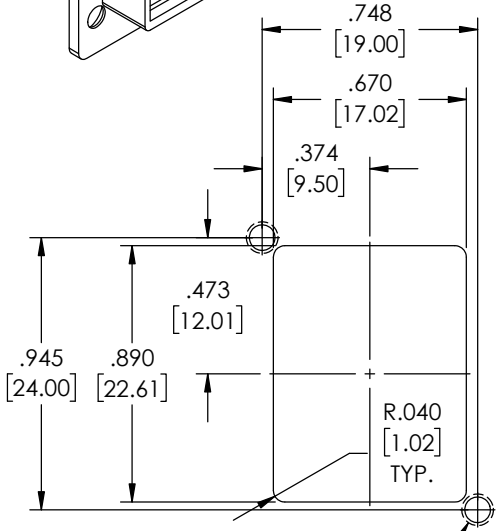

2X, 4-40 UNC-2B THRU

△D RECOMMENDED PANEL CUTOUT

△D

NOTES:

MATERIAL: ZINC ALLOY

FINISH: NICKEL PLATE

MISCELLANEOUS:
FLASH AND PARTING LINE MISMATCH: .003 MAX

COMPONENT SHALL BE PACKAGED IN BULK 10 PIECES PER BAG IN ACCORDANCE WITH L-COM SPECIFICATION PS-0031.

REGULATORY COMPLIANCE:
CE2011/65/EU(RoHS DIRECTIVE)

UNLESS OTHERWISE SPECIFIED,
DIMENSIONS ARE IN INCHES [mm]
OVERALL CABLE LENGTH TOLERANCE:
≤12 [305] = +1 [25] / -0
>12 [305] ≤60 [1524] = +2 [51] / -0
>60 [1524] ≤120 [3048] = +4 [102] / -0
>120 [3048] ≤300 [7620] = +6 [152] / -0
>300 [7620] = +5% / -0%
ALL OTHER DIMENSIONAL TOLERANCES:
.X = ± .2 [5.08]
.XX = ± .02 [.51]
.XXX = ±.005 [.13]

PROJECTION

APPROVALS	DATE
DRAWN BY DFRISIELLO	11/16/2012
CHECKED BY D.GALLAGHER	11/16/2012
APPROVED BY D.GALLAGHER	11/16/2012

CONFIGURATION DETAILS OF UNDIMENSIONED FEATURES MAY VARY

COLOR VARIATIONS MAY OCCUR

L-COM Global Connectivity
50 HIGH STREET
NORTH ANDOVER, MA
01845

CATEGORY
TELECOM/MODULAR

PRODUCT DESCRIPTION
FLANGE MNT-KEYSTONE ADPT FOR XLR STYLE MNT

SIZE	FSCM NO.	DWG. NO.	REV.
A	43321	ECF-XLR-10	D

SCALE: NONE | CAD FILE: ECF-XLR-10.SLDDRW | SHEET 1 OF 1