E12673

Wirable plug

SSTGX050ZDSFKPG

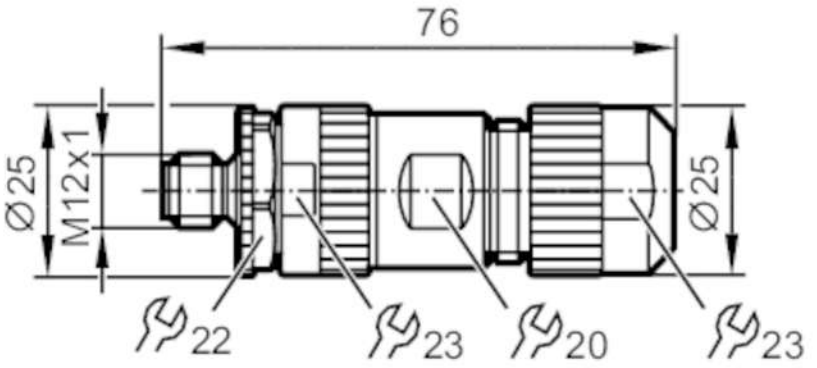

Application		
Special feature		Gold-plated contacts
Design		L-coded
Electrical data		
Operating voltage	[V]	< 63 DC
Max. current load total	[A]	16
Operating conditions		
Ambient temperature	[°C]	-40...85
Protection		IP 67
Mechanical data		
Weight	[g]	43.05
Dimensions	[mm]	Ø 25 / L = 76
Materials		PA
Moulded-body material		PA
Material nut		diecast zinc, nickel-plated
Remarks		
Pack quantity		1 pcs.

E12673

Wirable plug

SSTGX050ZDSFKPG

Electrical connection

screw terminals: 1.5...2.5 mm²; Cable sheath: Ø 8...13 mm

Electrical connection - plug

Connector: 1 x M12, straight; coding: L; Moulded body: PA; Locking: diecast zinc, nickel-plated; Contacts: gold-plated



Connection

