PRODUCT DETAILS

ARTICLE: 19211HD

WHEEL A 150X40/50 INOX RB BOLT HOLE F.14 FORK X20



Wheel series A

Wheels with cast polyurethane coating 95 Sh.A on polyamide 6 center. Wheel fitted with stainless steel roller bearing.

Castor series INOX20

Inox20 series, polished stainless steel forks, swivels with double ball races.

Sigle bolt hole fixing for bolt diam. 12-14 mm.

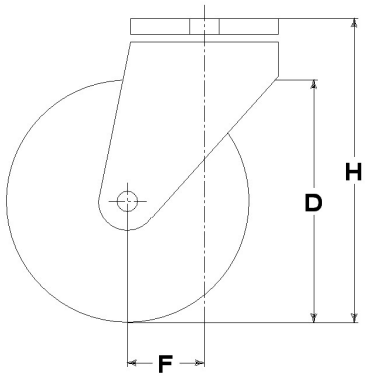

Technical data

Wheel diameter	D	150 mm
Tyre width	E	40,0 mm
Bore diameter	d	20 mm
Weight article		1,360 kg
Hub width	L	50 mm
Overall height	H	181 mm
Fixing bolt diameter	g	M12-14
Offset	F	51 mm
Fork width	U	50 mm
Load Capacity		250 kg

Related Articles

Spare part wheel: 4513/X
Version with trailing brake: 19211FRHD

GENERAL INFORMATION / RECOMMENDATIONS AND WARNINGS

The cited text and the complete catalogue in their most up-dated versions are available in the OEM's website page www.lagspa.it/downloads. The dimensions, descriptions, specifications and illustrations herein are indicative and subject to variations without notice. The fact that products are illustrated herein does not necessarily imply they are available from stock nor does it place us under any obligation to supply them. Tests carried out refer to the original products with original accessories: the replacement of one of the components with others of different manufacture might prevent the same results from being achieved and will automatically invalidate any guarantee. Please contact our technical service concerning any special application.