Data sheet

Power supply CP-T 24/40.0
Primary switch mode power supply

The CP-T range of three-phase power supply units is the youngest member of ABB's power supply family. In terms of design and functionality, the new range perfectly supplements the existing products and extends the range appropriately. The devices can be supplied with a three-phase voltage as well as with two-phase mains. Here, ABB offers a power supply unit with 24 V DC output with 40 A and efficiency of up to 92 %. As in the case of all products, they are designed for an ambient temperature of up to 70 °C.



2CDC 271 048 S0009

Characteristics

- Rated output voltage 24 V DC
- Output voltage adjustable via front-face rotary potentiometer "OUTPUT Adjust"
- Active current balancing for parallel mode
- Rated output current 40 A
- Rated output power 960 W
- Wide supply voltage range 3 x 400-500 V AC (340-575 V AC, 480-820 V DC)
- Two-phase supply with a derating of the output to 75 % possible / permitted
- High efficiency of up to 92 %
- Low power dissipation and low heating
- Free convection cooling (no forced cooling with ventilators)
- Ambient temperature range during operation -40...+70 °C
- Open-circuit, overload and short-circuit stable
- Integrated input fuse
- Redundancy unit CP-A RU offering true redundancy, available as accessory
- Signalling contact "13-14" (solid-state) for output voltage OK

Approvals

UL 508, CAN/CSA C22.2 No.14[1)]

ANSI/ISA-12.12 (Class I, Div. 2, Hazardous Locations), CAN/CSA C22.2 No. 213[1)]

UL 60950, CAN/CSA C22.2 No. 60950[1)]

GB4943, GB9254, GB17625.1

GOST

[1)] Approvals refer to rated input voltage U_{in}

Marks

CE

C-Tick pending

Order data

Power supply

Type	Input voltage range	Rated output voltage	Rated output current	Order code
CP-T 24/40.0	340-575 V AC 480-820 V DC	24 V DC	40 A	1SVR 427 057 R0000

Accessory

Type	Description	Order code
CP-A RU	The redundancy unit CP-A RU provides decoupling of two 24 V DC CP power supply units.	1SVR 427 071 R0000



1 Wide input range
INPUT L1, L2, L3, PE: terminals - input

Optimised for worldwide applications: The CP-T power supply units can be supplied for a wide range of AC and DC voltages. Both kinds of power supply (three-phase and two-phase) are possible.

2 Circuit diagram

3 Adjustable output voltage
OUTPUT Adjust: potentiometer

The CP-T range types feature a continuously adjustable output voltage. Thus, they can be optimally adapted to the application, e.g. compensating the voltage drop caused by a long cable length.

4 Indication of operational states
OUTPUT LOW: red LED - output voltage too low
OUTPUT OK: green LED - output voltage OK

5 Signalling contact
OUTPUT 13-14: terminals - signalling contact

6 Current balancing
Current balance CB+, CB-

For active current balancing in parallel operation

7 Output
OUTPUT L+, L+, L-, L-: terminals - output

Application

The primary switch mode power supply offers a three-phase supply voltage range of 3 x 400-500 V AC. A two-phase power supply is also possible and it can also be supplied by 480-820 V DC. Furthermore, this power supply unit is equipped with two generous capacitors, which ensure mains buffering of at least 15 ms. That is why the devices can be used worldwide also in high fluctuating networks and battery-powered plants.

Operating mode

By means of the potentiometer "OUTPUT Adjust" the output voltage can be adjusted within a range of 22.5-28.5 V DC. Thus, the power supply can be optimally adapted to the application, e.g. compensating the voltage drop caused by a long line length.

The green LED "OUTPUT OK" is lightening during proper operation, i. e. when the output voltage exceeds 75 %.

The red LED "OUTPUT LOW" is lightening when the output voltage is less than 70 % of the rated output voltage.

Two-phase supply is permissible with a derating of the output to 75 %.

Signalling contact "13-14" (max. 60 V DC / 0.3 A) is ON when the output voltage exceeds 19.4 V.

Installation

The device must be installed by qualified persons only and in accordance with the specific national regulations (e.g. VDE, etc.). The devices are maintenance-free chassis-mounted units.

Before installation



DANGER!

Components with high stored energy and circuits with high voltage

Danger to be electrocuted!

- ▶ Disconnect the system from the supply network and protect against switching on before any installation, maintenance or modification work.
- ▶ Do not introduce any objects into the unit and do not open the unit.
- ▶ Ensure that the service personnel is protected against inadvertent contact with parts carrying energy.

Mounting

The switch mode power supply can be snapped on a DIN rail (TH 35-15 or TH 35-7.5 according to IEC/EN 60715) as shown in the accompanying picture. For that the device is set with its mounting rail slide on the upper edge of the mounting rail and locked by lifting it downwards.

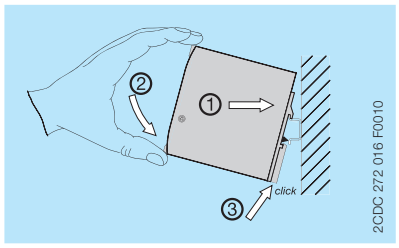

Demounting

Remove the switch mode power supply as shown in the accompanying picture. For that the latching lever is pulled downwards by means of the screwdriver. Alternatively you can press the unlock button to release the device. Then in both cases the device can be unhinged from the mounting rail edge and removed.

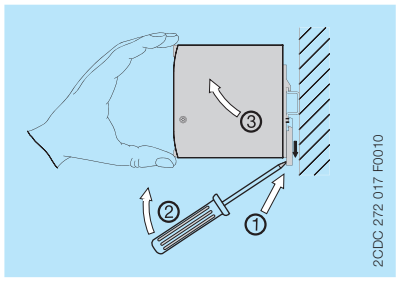

Mounting position

The devices have to be mounted horizontally with the input terminals on the bottom. In order to ensure a sufficient convection, the minimum distance to other modules should not be less than 25 mm (0.98 in) in vertical and horizontal direction.

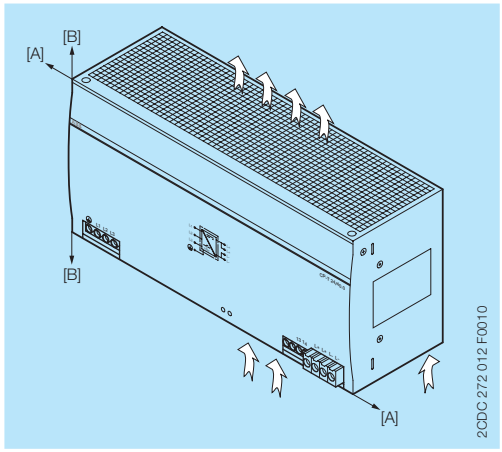

Electrical connection

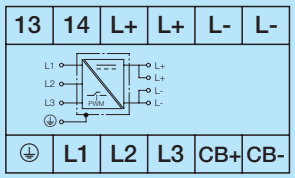

2CDC 272 005 F0010

L+, L-	Output voltage
L1, L2, L3	Input voltage
13-14	Signalling contact
⏚	Protective earth
CB+, CB-	Current balance

Connection diagram

Preparations:

- Connect to main according to the specific national regulations.
- Power supply cables and unit must be sufficiently fused. A disconnecting device has to be provided for the power supply to disengage unit and supply cables from supply mains if required.
- We recommend to choose the cable section as large as possible in order to minimize voltage drops.
- In order to ensure sufficient air-cooling the distance to other devices has to be considered.

Instructions:

1. Connect the input terminals L1, L2 and L3.
2. Connect the protective earth conductor to the terminal ⏚ (protection class I).
3. Provide a suitable disconnecting device (e.g. line protection switch) in the supply line acc. to IEC/EN 60950.
4. Rate the lines for the maximum output current (considering the short-circuit current) or provide a separate fuse protection. The input side is protected by an internal input fuse.
5. Observe the polarity.

The device is overload, short-circuit and open-circuit proof. The secondary side of the power supply unit is electrically isolated from the input and internally not earthed (SELV) and can therefore be earthed by the user according to the needs with L+ or L- (PELV).

Operation



DANGER!

High current

Risk of electric arcs and electric shocks!

- ▶ Do not modify the installation (primary and secondary side).
- ▶ Intended use.



CAUTION!

Depending on the operation conditions the enclosure can become very hot

Risk of burns!

- ▶ In order to ensure sufficient air-cooling the distance to other devices has to be considered.

The device is intended for use as a primary switch mode power supply. Any other usage is not supported by the manufacturer. Other usage may impair safety and cause operational difficulties or destruction of the unit.

Service

The internal fuse is not user-replaceable. If the internal fuse blows, most probably the device is defective. In this case, an examination of the switch mode power supply by the manufacturer is necessary.

Technical data

Data at T_a = 25 °C, U_{in} = 3 x 400 V AC and rated values, unless otherwise indicated

Input circuit - supply circuit		L1, L2, L3
Rated input voltage U_{in}		3 x 400-500 V AC
Input voltage range		340-575 V AC
		480-820 V DC
Frequency range AC		47-63 Hz
Typical input current		1.72 A
Typical power consumption		1058 W
Inrush current limiting		30 A
Power failure buffering time		min. 15 ms
Internal input fuse	per phase	T5 A / 500 V AC
Recommended backup fuse		3 pole miniature circuit breaker ABB type S 203
	characteristic	B or C
	max. rating	20 A
Power factor correction (PFC)		yes, passive, 0.8
Discharge current	towards PE	< 3.5 mA
	input / output	< 0.25 mA

Indication of operational states		
Output voltage	OUTPUT OK: green LED	output voltage OK
	OUTPUT LOW: red LED	output voltage too low

Output circuit		L+, L+, L-, L-
Rated output power		960 W
Rated output voltage		24 V DC
Tolerance of the output voltage		0...+1 %
Adjustment range of the output voltage		22.5-28.5 V DC
Rated output current I_r	$T_a \leq 60$ °C	40 A
Derating of the output current	60 °C < $T_a \leq 70$ °C	3.5 %/°C
Signalling contact for output voltage OK	13-14	solid-state (max. 60 V DC, 0.3 A)
	threshold	17.6-19.4 V
	insulation voltage	500 V DC
Mininum fuse rating to achieve short-circuit protection	13-14	≥ 60 V DC, ≤ 0.3 A fast-acting
Maximum deviation with	load change statical	±1 % (single mode) ±5 % (parallel mode)
	change of output voltage within the input voltage range	±0.5 %
Control time	at rated load	< 2 ms
Starting time after applying the supply voltage	at I_r	max. 1 s
	with 7000 µF	max. 1.5 s
Rise time	at rated load	max. 150 ms
	with 7000 µF	max. 500 ms
Fall time		max. 150 ms
Residual ripple and switching peaks	BW = 20 MHz	80 mV
Parallel connection		to increase power, up to 2 devices, min. 0.1 I_r , max. 0.9 I_r, use active current balancing
Series connection		yes, to increase voltage, max. 2 devices

Output circuit - no-load, overload and short-circuit behaviour	
Characteristic curve of output	hiccup mode / fold back behaviour
Short-circuit protection	continuous short-circuit proof
Short-circuit behaviour	current limiting
Resistance to reverse feed	approx. 35 V
Overload protection	hiccup mode
No-load protection	continuous no-load stability
Overtemperature protection	yes, automatic recovery after temperature went down
Starting of capacitive loads	7000 µF

General data		
Efficiency		typ. 92 %
Duty time		100 %
Dimensions of housing (W x H x D)		275.8 x 124 x 118.8 mm (10.86 x 4.88 x 4.68 in)
Weight		3.275 kg (7.220 lb)
Material of housing		metal
Mounting		DIN rail (IEC/EN 60715), snap-on mounting without any tool
Mounting position		horizontal
Minimum distance to other units	horizontal / vertical	25 mm / 25 mm (0.98 in / 0.98 in)
Degree of protection	housing / terminals	IP20 / IP20
Protection class		I

Electrical connection - input circuit		L1, L2, L3
Wire size	fine-strand with wire end ferrule	0.2-4 mm² (24-11 AWG)
	fine-strand without wire end ferrule	0.2-6 mm² (24-10 AWG)
	rigid	0.2-6 mm² (24-10 AWG)
Stripping length		8 mm (0.31 in)
Tightening torque		1 Nm (9 lb.in)

Electrical connection - output circuit		L+, L+, L-, L-
Wire size	fine-strand with wire end ferrule	0.5-10 mm² (20-8 AWG)
	fine-strand without wire end ferrule	0.5-16 mm² (20-6 AWG)
	rigid	0.5-16 mm² (20-6 AWG)
Stripping length		10 mm (0.39 in)
Tightening torque		1.8 Nm (15.6 lb.in)

Electrical connection - signalling circuit		13, 14, CB+, CB-
Wire size	fine-strand with wire end ferrule	0.2-4 mm² (24-11 AWG)
	fine-strand without wire end ferrule	0.2-6 mm² (24-10 AWG)
	rigid	0.2-6 mm² (24-10 AWG)
Stripping length		8 mm (0.31 in)
Tightening torque		0.6 Nm (5.5 lb.in)

Environmental data		
Ambient temperature range	operation	-40...+70 °C
	rated load	-40...+60 °C
	storage	-40...+85 °C
Damp heat, cyclic	IEC/EN 60068-2-30	95 % without condensation
Vibration, sinusoidal	IEC/EN 60068-2-6	2 g, 10-500 Hz, 2G, each along X, Y, Z axes 60 min / cycle
Shock, half-sine	IEC/EN 60068-2-27	15 g, 11 ms, 3 axes, 6 faces, 3 times for each face

Isolation data		
Rated insulation voltage U_i	input circuit / output circuit	3 kV AC
	input / PE	1.5 kV AC
	output / PE	0.5 kV AC; 0.71 kV DC
	signalling contact / PE	0.5 kV DC
Pollution degree		2
Overvoltage category	UL/EN/IEC 60950-1	II

Standards	
Product standard	EN 61204-3
Low Voltage Directive	2006/95/EC
EMC Directive	2004/108/EC
RoHS Directive	2002/95/EC
Electrical safety	EN 60950-1, UL 60950-1, UL 508, EN 61558-1, EN 61558-2-17, EN 60204-1
Protective low voltage	SELV

Electromagnetic compatibility		
Interference immunity to		IEC/EN 61000-6-2
electrostatic discharge	IEC/EN 61000-4-2	level 4 (air discharge 15 kV / contact discharge 8 kV)
radiated, radio-frequency, electromagnetic field	IEC/EN 61000-4-3	level 3 (10 V/m)
electrical fast transient/burst	IEC/EN 61000-4-4	level 4 (4 kV / 5 kHz)
surge	IEC/EN 61000-4-5	L-L level 3 (2 kV) / L-PE level 4 (4 kV)
conducted disturbances, induced by radio-frequency fields	IEC/EN 61000-4-6	level 3 (10 V)
power frequency magnetic fields	IEC/EN 61000-4-8	level 4 (30 A/m)
voltage dips, short interruptions and voltage variations	IEC/EN 61000-4-11	dips: >95 % 0.5 ms / >30 % 25 ms interruptions: >95 % 250 ms
Interference emission		IEC/EN 61000-6-3
high-frequency radiated	IEC/CISPR 22, EN 55022	class B
high-frequency conducted	IEC/CISPR 22, EN 55022	class B
limits for harmonic current emissions	IEC/EN 61000-3-2	class A

Technical diagrams

Output behaviour

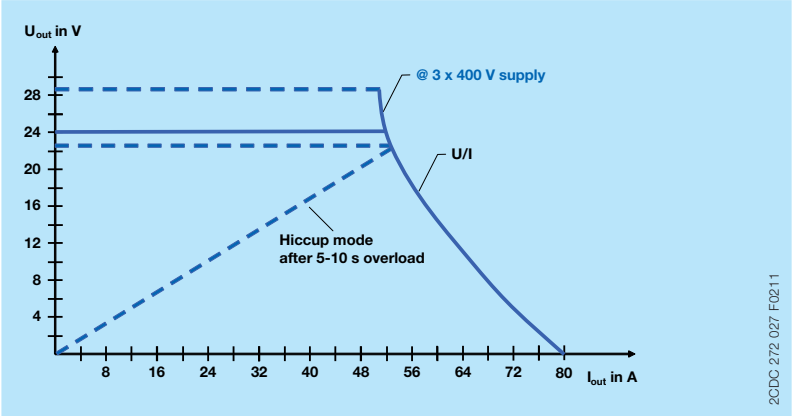

Characteristic curve of output at T_a = 25 °C

The switch mode power supply CP-T 24/40.0 is able to supply at 24 V DC output voltage and

– at an ambient temperature of:
  ≤ 60 °C a continuous output current of approx. 40 A
– at ambient temperatures of:
  60 °C < T_a ≤ 70 °C the output power has to be reduced by 3.5 % per °C temperature increase.

If the switch mode power supply is loaded with an output current > 40 A, the operating point is passing through the U/I characteristic curve shown.

Temperature behaviour

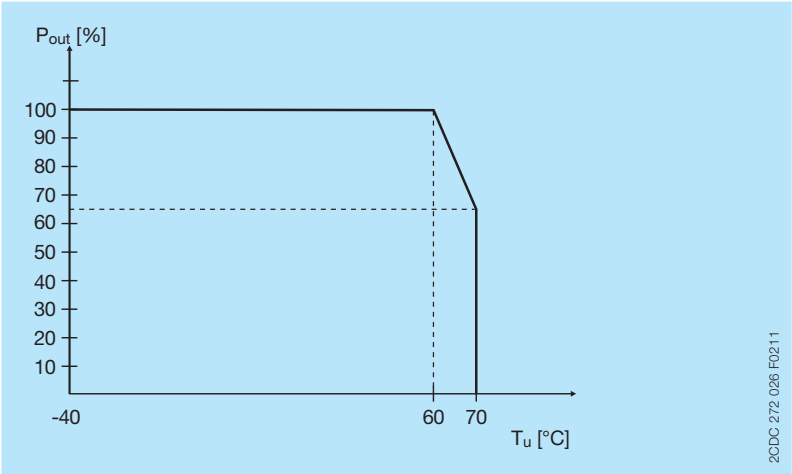

Characteristic curve of temperature at rated load

Dimensions

in **mm** and inches

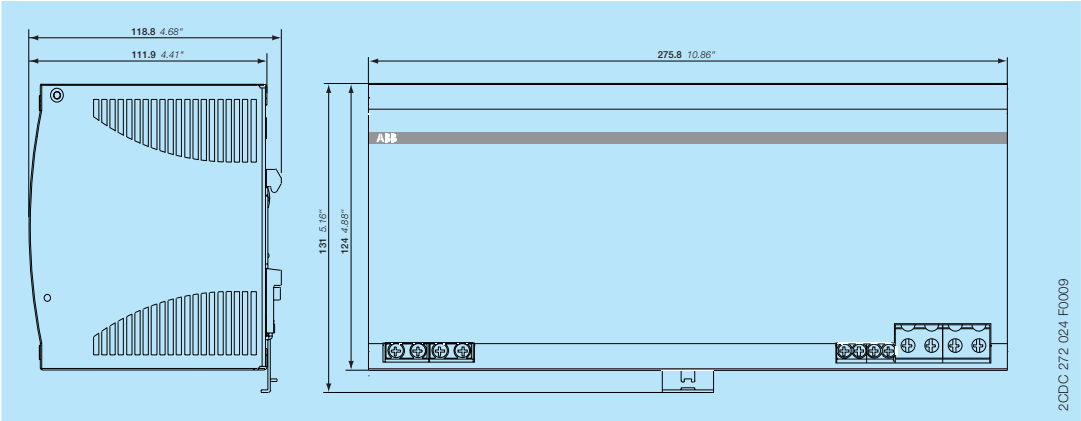

Power supply

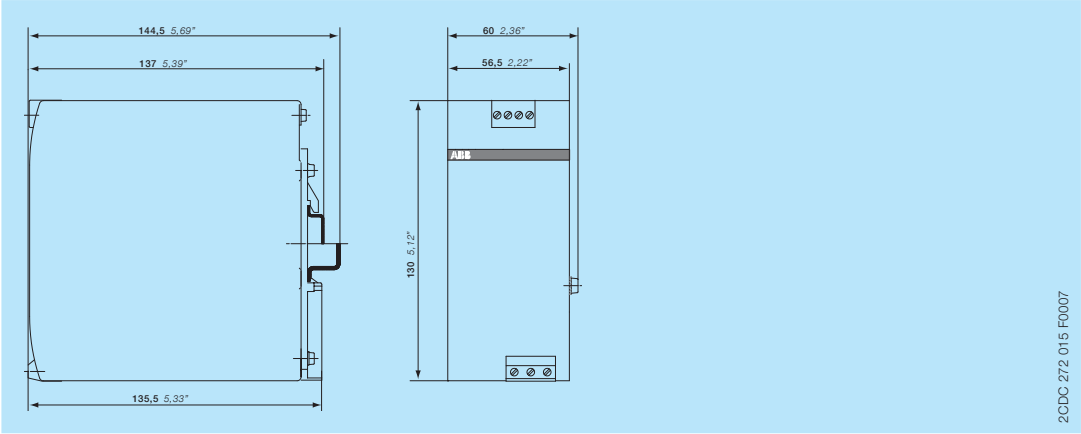

Accessory redundancy unit CP-A RU

Wiring notes for parallel connection

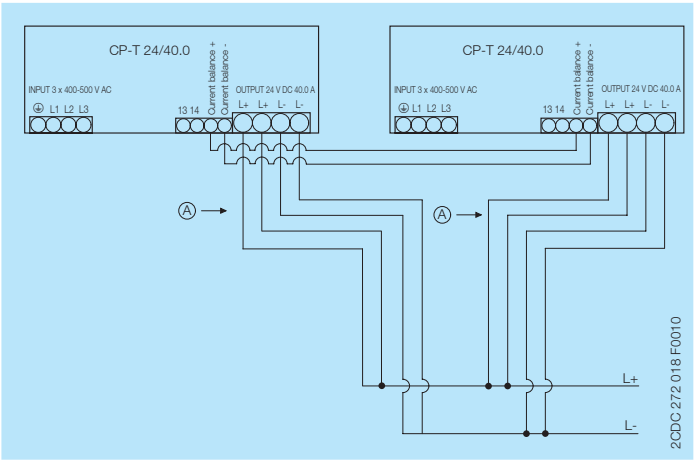

Active current balancing in parallel operation

Ⓐ Same length of the wires for current balancing

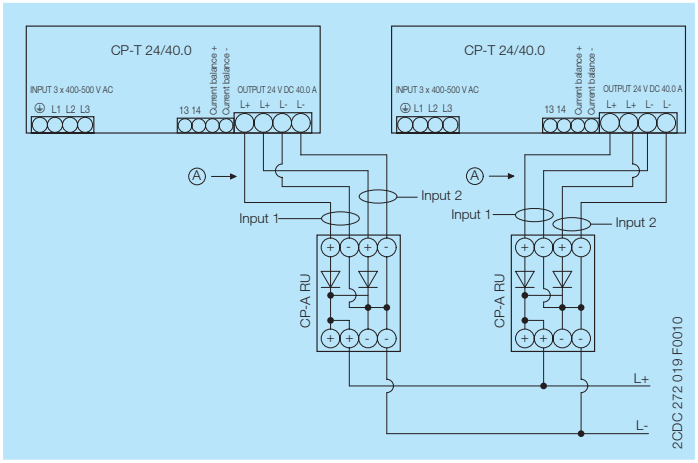

True redundancy with accessory CP-A RU

The max. ambient temperature is +40 °C, if the full ouput current of 40 A is used.

Ⓐ Same length of the wires for current balancing

Further documentation

Document title	Document type	Document number
Electronic products and relays	Technical catalogue	2CDC 110 004 C020x
Power supply units	Application manual	2CDC 114 048 M020x
Redundancy unit CP-A RU	Data sheet	2CDC 114 036 D0202

You can find the documentation on the internet at www.abb.com/lowvoltage -> Control Products -> Power Supplies

CAD system files

You can find the CAD files for CAD systems at http://abb-control-products.partcommunity.com/PARTcommunity/Portal/abb-control-products -> Low Voltage Products & Systems -> Control Products -> Power Supplies.

Contact us

ABB STOTZ-KONTAKT GmbH
P. O. Box 10 16 80
69006 Heidelberg, Germany
Phone: +49 (0) 6221 7 01-0
Fax: +49 (0) 6221 7 01-13 25
E-mail: info.desto@de.abb.com

You can find the address of your
local sales organisation on the
ABB home page
http://www.abb.com/contacts
-> Low Voltage Products and Systems

Document number 2CDC114070D0201 printed in Germany (08/12)

Note:
We reserve the right to make technical changes or modify the contents of this document without prior notice. With regard to purchase orders, the agreed particulars shall prevail. ABB AG does not accept any responsibility whatsoever for potential errors or possible lack of information in this document.

We reserve all rights in this document and in the subject matter and illustrations contained therein. Any reproduction, disclosure to third parties or utilization of its contents – in whole or in parts – is forbidden without prior written consent of ABB AG.

Copyright© 2010 ABB
All rights reserved