87045 LIMOGES Cedex
Téléphone : + 33 5 55 06 87 87 – Fax : + 33 5 55 06 88 88

Power contactors 40 A and 63 A with or without handle

Cat. N°(s) : 412 506, 507, 511, 512, 515, 516, 518, 519, 525 to 528, 530, 531, 537 to 542, 545 to 550, 552 to 557, 559, 560, 562, 563

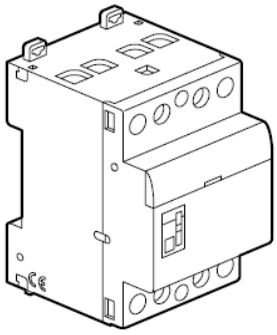

CONTENTS PAGE

1. Description, use 1
2. Range 1
3. Overall dimensions 1
4. Preparation - Connection 2
5. General characteristics 3
6. Conformities and approvals 5
7. Auxiliaries 5

1. DESCRIPTION - USE

Symbol :

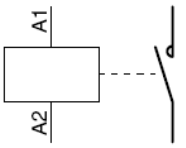

Technology :
. Electromagnetic contactor

Use :
. remote control of a load by the mean of a switch

2. RANGE

Rated thermal current :
. Ith = 40 and 63 A

Types of contacts :

. « NO », normally open contact 

. « NC », normally closed contact 

Poles :
. Double pole in 2 module (2 x 17,8 mm = 35,6 mm)
- « 2NO »
- « 2NC »

. Four pole in 3 modules (3 x 17,8 mm = 53,4 mm)
- « 3NO »
- « 4NO »
- « 4NC »
- « 3NO + 1NC »

Rated voltage (power contacts) :
. Un = 250 V / 400 V ~

Rated control voltage :
. 24 V and 230 V ~

Rated frequency, power and control :
. 50 / 60 Hz

3. OVERALL DIMENSIONS

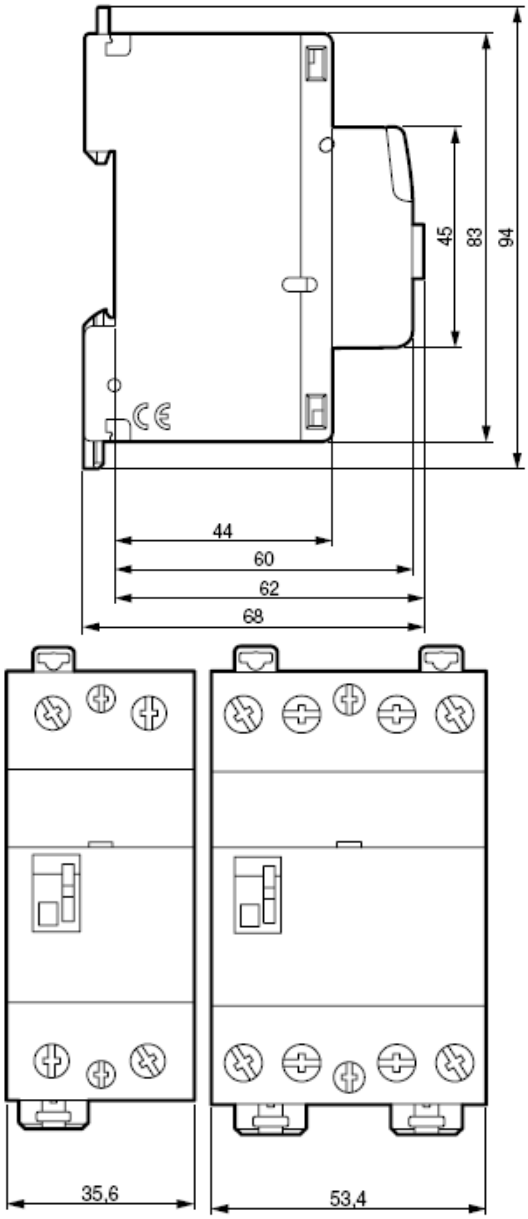

4. PREPARATION - CONNECTION

Installation software :
. XL PRO

Operational positions :
. Vertical, horizontal, upside down, on the side

Fixing :
. On symetrical rail EN 50-055 or DIN 35 by the mean of two plastic clamps.

Recommended tools :
. For control terminal screws : screwdriver, insulated or not, Pozidriv n°1 or plate (4mm wide).
. For power terminal screws : screwdriver, insulated or not, Pozidriv n°2 or plate (6.5mm wide).
. For fixing : Pozidriv n°1 or plate (5.5 mm max) screwdriver

Examples of wiring diagrams :
. Contactor « 2 NO »

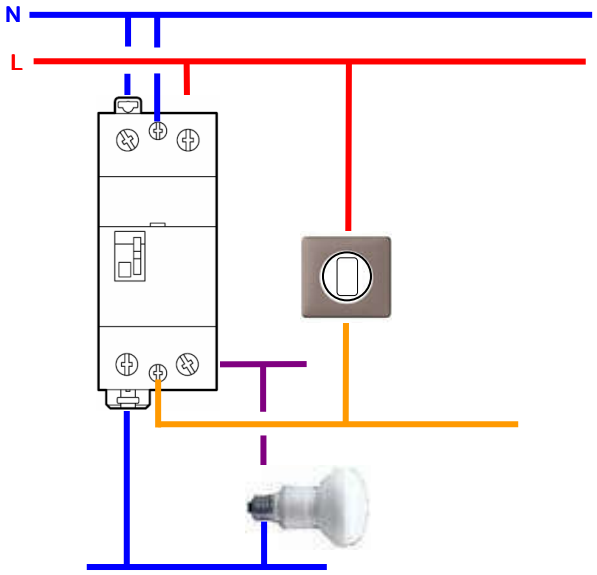

4. PREPARATION - CONNECTION *(continued)*

. Contactor « 3 NO »

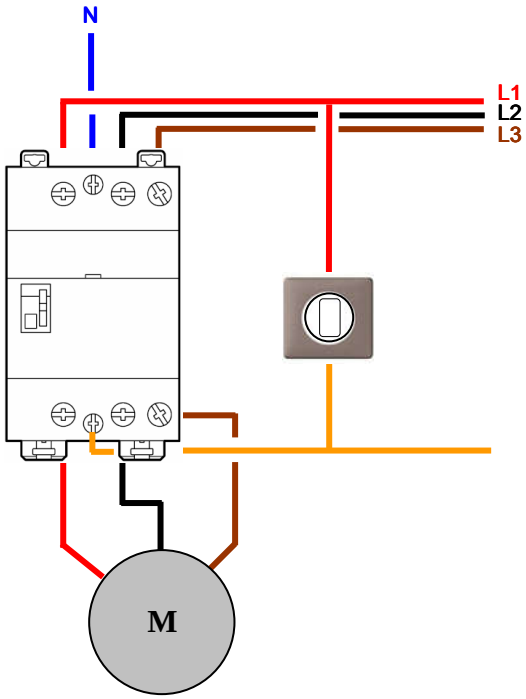

. Contactor « 4 NO »

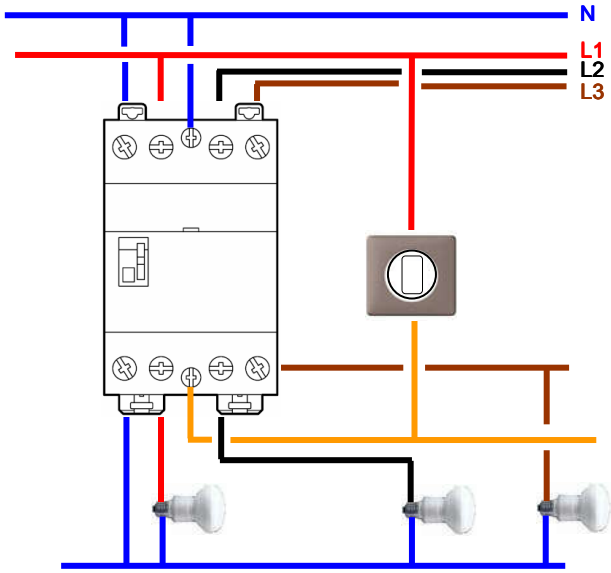

4. PREPARATION - CONNECTION *(continued)*

Connection :

. Control screw terminals :
- Type of terminal : cage terminals
- Terminal depth : 12 mm
- Terminal capacity (h x w) : 4.7 x 4.7 mm
- Copper cables

Rigid : 1 x (0.75 to 6 mm²) or 2 x (0.75 to 2.5 mm²)
Flexible without ferrule : 1 x (0.75 to 6 mm²) or 2 x (0.75 to 2.5 mm²)
Flexible with single ferrule : 1 x (0.75 to 6 mm²)
Flexible with double ferrule : 1 x (0.75 to 4 mm²)
- Screw head type: mixed, Posidriv n° 1 and slotted 4 mm
- Type of screw : M3
- Tightening torque : mini = 0.5 Nm / max = 1.2 Nm / recommended = 0.8 Nm

. Power screw terminals :
- Type of terminal : cage terminals
- Terminal depth : 14 mm
- Copper cables

Rigid : 1 x (0.75 to 25 mm²) or 2 x (0.75 to 10 mm²)
Flexible without ferrule : 1 x (0.75 to 25 mm²) or 2 x (0.75 to 10 mm²)
Flexible with single ferrule : 1 x (0.75 to 16 mm²)
Flexible with double ferrule : 1 x (0.75 to 16 mm²)
- Screw head type: mixed, Posidriv n° 2 and slotted 6.5 mm
- Type of screw : M5
- Tightening torque : mini = 1.3 Nm / max = 3.5 Nm / recommended = 2.5 Nm

Length of control lines :

. 24 V contactor : 100 m with 1.5 mm² copper wire
. 230 V contactor : 300 m whatever the wire cross-section.

Protection degree :

. Terminal ingress protection : IP2x (device connected)
. Front face ingress protection : IP3XD
. Classe II, front face behind a cabinet faceplate
. Protection against mechanical shocks : IK04

Shaking resistance :

. No change of contact state during shaking test in accordance with EN 60898 standard

actuation :

. By electric remote control (switch)
. By ergonomic 3 position (I, auto, O) handle when contactor is equipped with

Display of contacts state :

. By orange indicator when manual or electric control is on
. When contactor is fitted with a handle,
Position « I » : permanent control ON
Position « O » : permanent control OFF
Position « auto » : electric control by switch

Labelling :

. Circuit may be labelled by the mean of the label holder on the front face of the latching relay

5. GENERAL CHARACTERISTICS

Marking :

By permanent ink pad printing :

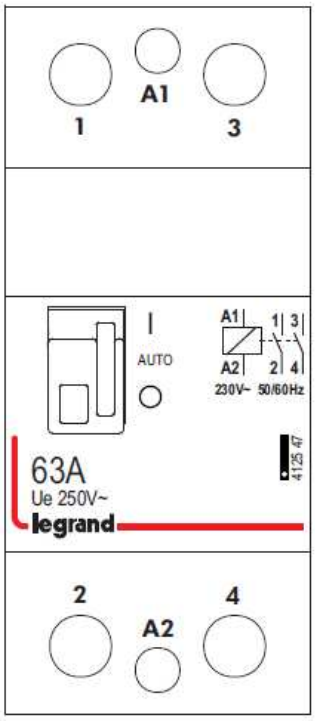

Isolation :

. > 3 mm in compliance with EN 61095 standard

Isolation rated voltage (Ui) :

. Double pole : 250 V~
. Triple pole / Four pole : 400 V~

Pollution degree :

. 2 according to EN 61095 standard

Isolation voltage between control and load :

. 4 000 V.

Rated impulse withstand voltage (Uimp) :

. 4 kV

5. GENERAL CHARACTERISTICS *(continued)*

Withstand to electromagnetic disturbances (EMC) :
. Schock wave 1,2 / 50 µs : class 4 (2 kV between lines, 4 kV between line and earth)

Influence of altitude :
. no effect up to 2 000 m

Rated frequency :
. 50 / 60 Hz

Rated current for each category of use (Ie) :

	AC1 / AC7a heating		AC3 / AC7b motors	
Type of contact	Ie	P	Ie	P
2NO / 2NC	**40 A**	**9 kW**	**22 A**	**5.5 kW**
3NO / 4NO / 3NO+1NC / 4 NC	**40 A**	**26 kW**	**22 A**	**11 kW**
2NO / 2NC	**63 A**	**14 kW**	**30 A**	**8 kW**
3NO / 4NO / 3NO+1NC / 4 NC	**63 A**	**40 kW**	**30 A**	**15 kW**

Operation rated voltage (Ue) :
. Ue = 250 V ~ for double pole
. Ue = 400 V ~ for triple pole and four pole

Protection against short-circuits :
. Conditionnal short-circuit current Iq = 3 000 A according to EN 61095 standard
. Maximum thermal stress : 18 000 A²s
. To protect 40 A and 63 A contactors against short-circuits in accordance with conditionnal current Iq = 3 000 A (EN 61095 standard), we recommend to use a ≤ 40 A rated current M.C.B.or gG fuse for a 40 A contactor and a ≤ 63 A rated current M.C.B.or gG fuse for a 63A contactor

Control voltage (Uc) :
. Uc = 230 V~ or 24 V~

Operating control voltage :
. from 0.85 to 1.1 Uc

Release control voltage :
. from 0.2 to 0.75 Uc

Control impulse time :
. 100 ms mini

Rated duty :
. Intermittent duty : 600 operating cycles per hour according to EN 61095 standard (class 600)

Force by handle operation :
. 500 g for closing and opening operation

Operation under 400 Hz :
. not possible

5. GENERAL CHARACTERISTICS *(continued)*

Endurance :
In number of operating cycles (ON + OFF)
. Control by handle : 1000 operating cycles
. Electrical control :
- 1 000 000 operating cycles with no load
- 100 000 operating cycles at Ie AC-7a in accordance with EN 61095 (same at Ie AC1)
- 30 000 operating cycles at Ie AC-7b in accordance with EN 61095 (same at Ie AC3)

Use with Direct Current (DC) :
. Control : do not operate with DC
. Power circuit : NO and NC contacts may be used to control loads supplied with DC in accordance with the table of max current below for 63 A contactors

	DC 1 (resistiv load)			DC 3 (motors)		
	number of poles in series			number of poles in series		
Ue	1 p	2 p	3 p	1 p	2 p	3 p
8 V=	**63 A**	**63 A**	**63 A**	**54 A**	**63 A**	**63 A**
12 V=	**63 A**	**63 A**	**63 A**	**50 A**	**63 A**	**63 A**
24 V=	**63 A**	**63 A**	**63 A**	**40 A**	**63 A**	**63 A**
48 V=	**53 A**	**63 A**	**63 A**	**20 A**	**45 A**	**63 A**
110 V=	**18 A**	**40 A**	**63 A**	**4 A**	**16 A**	**40 A**

Control consumption :

Type of contact	Control voltage	Current in mA (at Un)	
		sustain	inrush
2NO	24 V~	**250**	**1750**
4NO		**270**	**1500**
2NO	230 V~	**130**	**150**
2NC		**130**	**150**
3NO+1NC		**30**	**200**
3NO / 4NO / 4NC		**30**	**200**

Type of contact	Control voltage	Power in W (at Un)
		sustain
2NO	24 V~	**1.8**
4NO		**1.9**
2NO	230 V~	**0.9**
2NC		**0.9**
3NO+1NC		**2.1**
3NO / 4NO / 4NC		**2.1**

5. GENERAL CHARACTERISTICS *(continued)*

Average dissipated power per contact at 230V :

. 1.8 W per contact of 40 A contactor
. 3.5 W per contact of 63 A contactor

Annual energy consumption of contactors :

. Loads supplied in 230/400V 50Hz network
. Global energy consumption, control + power contacts, with an « average » use.

Type of contact	Control voltage	in KWh (at Un)
2NO	24 V~	**3.1**
4NO		**4.8**
2NO	230 V~	**2.4**
2NC		**2.4**
3NO		**4.1**
3NO+1NC		**5**
4NC		**5**
4NO		**5**

Noise (holding) :

. Standard contactor ≤ 50 dB at 1 cm and ≤ 30 dB at 1 m
. Noiseless contactor ≤ 32 dB at 1 cm and ≤ 20 dB at 1 m

Operating temperatures :

. A standard contactor is set to operate at its rated current (40 A or 63 A) in an ambient temperature of + 30°C
. In order to limitate overheating, we recommend to use a spacing element (cat. n° 044 40)

- Every 2 contactors if the ambient temperature ≤ 40°C
- Every contactors if the ambient temperature > 40°C

. Depending on ambient temperature, deratings below must be used :

- from - 25°C to + 40°C, no derating
- from + 40°C to + 60°C derating as in table below

Contactor rated current	40°C	50°C	60°C
Ie = 40 A	**40 A**	**36 A**	**32 A**
Ie = 63 A	**63 A**	**57 A**	**50 A**

Storage temperature :

. from - 40°C up to + 70°C

Moulded case material :

. Polyamid

Characteristics of the plastic material :

. Resistance to glow wire test during 30 s according to IEC 695-2-1:

- Handle : 650°C
- Other components : 850°C

Weight :

. 0.240 kg per double pole device
0.330 kg per triple pole / four pole device

Packaged volume :

. 0.4 dm^3 for double pole individually packaged units
. 0.6 dm^3 for triple pole and four pole individually packaged units

5. GENERAL CHARACTERISTICS *(continued)*

Contactors choice table :

For a life time of 10 years with 200 days of annual use

. Heating

Maximum power according to the number of operations per day (kW)						
Number of operations per day		≤ 50	75	100	250	500
230 V~ single phase heating	40 A	**9**	**7.5**	**6**	**4**	**2.5**
	63 A	**14**	**12**	**9.5**	**6**	**4.5**
400 V~ three phase heating	40 A	**26**	**22**	**17**	**8**	**6**
	63 A	**41**	**35**	**26**	**13**	**9**

. Motors (AC-7b)

Maximum power (kW)		
230 V~ single phase motor	40 A	**2.5**
	63 A	**4**
400 V~ three phase motor	40 A	**7.5**
	63 A	**15**

. Lighting

Maximum number of lamps per contact of the contactor in 230 V~ single phase network and 400 V~ three phase and neutral network.
. In 230 V~ three phase network with no neutral, values of the table must be divided by √3.

- Incandescent lamps

Tungsten filament 230 V~ and low voltage halogen				
Unit power	40 W	60 W	75 W	100 W
40 A	**96**	**77**	**61**	**48**
63 A	**154**	**123**	**97**	**77**

Tungsten filament 230 V~ and low voltage halogen (continued)				
Unit power	150 W	200 W	500 W	1000 W
40 A	**32**	**24**	**10**	**5**
63 A	**51**	**38**	**15**	**8**

Very Low Voltage halogen lamps with ferromagnetic ballast						
Unit power	20 W	35 W	50 W	75 W	100 W	150 W
40 A	**68**	**39**	**31**	**21**	**16**	**10**
63 A	**88**	**51**	**41**	**27**	**20**	**14**

Very Low Voltage halogen lamps with electronic ballast						
Unit power	20 W	35 W	50 W	75 W	100 W	150 W
40 A	**112**	**70**	**56**	**36**	**28**	**18**
63 A	**157**	**98**	**78**	**51**	**39**	**25**

5. GENERAL CHARACTERISTICS *(continued)*

- Fluorescent lamps with ferromagnetic ballast

Single parallel compensated					
Unit power	18 W	20 W	36 W	58 W	115 W
40 A	**43**	**39**	**33**	**22**	**12**
63 A	**56**	**51**	**42**	**29**	**15**

Twin serial compensated					
Unit power	2 x 20 W	2 x 36 W	2 x 40 W	2 x 58 W	2 x 140
40 A	**68**	**57**	**53**	**36**	**15**
63 A	**101**	**86**	**79**	**54**	**23**

Four serial compensated	
Unit power	4 x 18 W
40 A	**36**
63 A	**54**

Compact with integrated starter				
Unit power	7 W	10 W	18 W	26 W
40 A	**78**	**65**	**55**	**36**
63 A	**101**	**85**	**71**	**47**

- Fluorescent lamps with electronic ballast

Single				
Unit power	18 W	30 W	36 W	58 W
40 A	**165**	**102**	**87**	**54**
63 A	**248**	**153**	**131**	**81**

Twin			
Unit power	2 x 18 W	2 x 36 W	2 x 58 W
40 A	**84**	**45**	**29**
63 A	**126**	**68**	**43**

Triple serial compensated		
Unit power	3 x 14 W	3 x 18 W
40 A	**62**	**51**
63 A	**84**	**69**

Four serial compensated		
Unit power	4 x 14 W	4 x 18 W
40 A	**52**	**39**
63 A	**73**	**55**

With integrated electronic supply					
Unit power	7 W	11 W	15 W	20 W	23 W
40 A	**280**	**175**	**126**	**98**	**84**
63 A	**392**	**245**	**176**	**137**	**118**

5. GENERAL CHARACTERISTICS *(continued)*

- Discharge lamps with compensator

Metal halide						
Unit power	35 W	70 W	100 W	150 W	250 W	400 W
40 A	**23**	**14**	**11**	**8**	**5**	**3**
63 A	**34**	**20**	**16**	**11**	**7**	**5**

Low pressure sodium						
Unit power	18 W	35 W	55 W	90 W	135 W	180 W
40 A	**30**	**15**	**11**	**8**	**5**	**5**
63 A	**45**	**23**	**16**	**11**	**7**	**7**

High pressure sodium					
Unit power	70 W	150 W	250 W	400 W	1000 W
40 A	**15**	**14**	**9**	**6**	**3**
63 A	**23**	**20**	**14**	**9**	**5**

High pressure mercury					
Unit power	50 W	80 W	125 W	250 W	400 W
40 A	**21**	**14**	**11**	**6**	**4**
63 A	**29**	**20**	**16**	**8**	**6**

Mixed high pressure				
Unit power	100 W	160 W	250 W	400 W
40 A	**14**	**9**	**7**	**4**
63 A	**19**	**12**	**8**	**5**

6. CONFORMITIES AND APPROVALS

Compliance :

. EN 61095 / NFC 61-480 – IEC 61095

Certificates :

. NF (France)
. VDE (Germany)
. GOST (Russia)

Tropicalization :

. execution 2 (all climates) according to U.T.E. C 63-100 guide

Environment :

. complying with RoHS
. without halogen

7. AUXILIARIES

Auxiliaries :

. Signalling change-over switch NO+NC auxiliary cat. n° 412431.
. Used to indicate the position status of the contacts of the product with which it is associated.

Association of the auxiliaries :

. Auxiliaries are fitted on left hand side of contactor
. Maximum of 1 change-over switch auxiliary per contactor