Brand of NTN Group

Technical data

UC208-24G2L3

Insert bearings



Spherical outer diameter, fixing by socket set screw, triple lip seal

VISUAL (S)

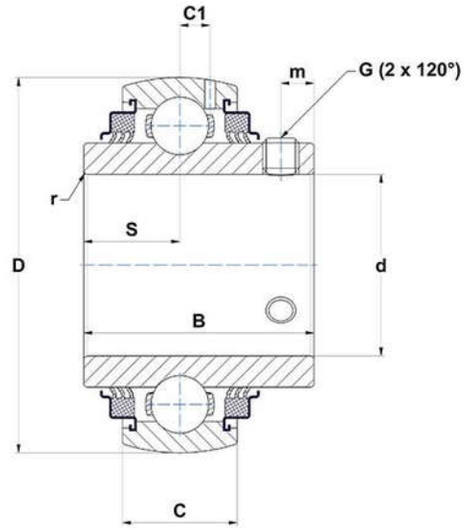

PRODUCT DEFINITION

Brand	SNR
B - Width of Inner Ring	49,2 mm
C - Width of Outer Ring	21 mm
C1 - Distance center of OR to center of lubrication zone	6,3 mm
d - Shaft diameter	38,1 mm
D - Outer diameter of OR	80 mm
G - Set screw size	5/16-24UNF
m - Distance to set screw	8 mm

UC208-24G2L3
Insert bearings

PRODUCT DEFINITION	
r - Radius Inner Ring	1.1
S - Distance front side/bearing centre	19 mm
f0 - Factor	14
SW - Wrench size	3,969 mm

PRODUCT PERFORMANCE	
C - Dynamic load rating	29600000 mN
C0 - Static load rating	18200000 mN
Operating temperature min.	253,15 °K
Operating temperature max.	373,15 °K

OTHER FEATURES	
Mass	0,68 kg
Recommended tightening torque for set screw	8 N-m

BEARING FREQUENCIES	
BPFO - Over rolling frequency on outer ring (60 rpm)	3.607035 Hz
BPFI - Over rolling frequency on inner (60 rpm)	5.392965 Hz
BSF - Over rolling frequency on rolling element (60 rpm)	4.84095457487135 Hz
BRF - Rotational frequency – rolling element (60 rpm)	2.42047728743567 Hz
FTF - Rotational frequency - cage (60 rpm)	0.400781666666667 Hz