6005-2Z

SKF Explorer

Dimensions

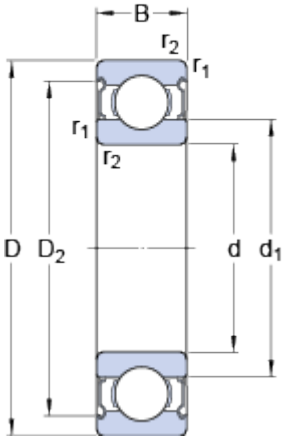

d		25	mm
D		47	mm
B		12	mm
d_1		32	mm
D_2		42.2	mm
$r_{1,2}$	min.	0.6	mm

Abutment dimensions

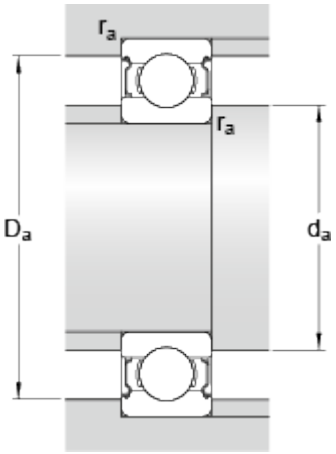

d_a	min.	28.2	mm
d_a	max.	31.9	mm
D_a	max.	43.8	mm
r_a	max.	0.6	mm

Calculation data

Basic dynamic load rating	C	11.9	kN
Basic static load rating	C_0	6.6	kN
Fatigue load limit	P_u	0.275	kN
Reference speed		32000	r/min
Limiting speed		16000	r/min
Calculation factor	k_r	0.025	
Calculation factor	f_0	14	

Mass

Mass bearing	0.0825	kg