Brand of NTN corporation

Technical data

ESPAE208

Bearing units

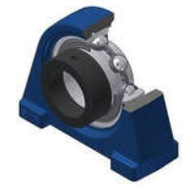

Grey cast housing, radial insert ball bearing with eccentric locking collar, single lip seal

KIT CONTENT

ES.208.G2, PAE208

VISUAL (S)

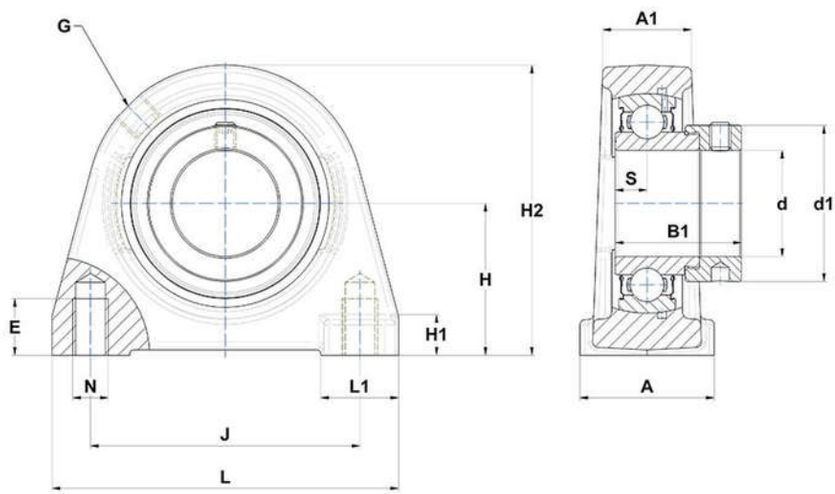

PRODUCT DEFINITION

Brand	SNR
A - Housing width	47 mm
A1 - Housing top width	30 mm
B - Width of Inner Ring	30,2 mm
d - Shaft diameter	40 mm
d1 - Outer dia of eccent. Lock. collar / nut of adapter sleeve	58 mm

PRODUCT DEFINITION	
E - Mounting hole thread depth	15 mm
G - Grease fitting	R1/8"
H - Distance mounting base to centerline spheric. seating diam.	49,2 mm
H1 - Housing foot height	13 mm
H2 - Housing height	99 mm
J - Mounting holes distance	88,9 mm
L - Housing length	116 mm
L1 - Housing foot length	27 mm
N - Mounting hole dimension	M12
S - Distance front side/bearing centre	11 mm

PRODUCT PERFORMANCE	
C - Dynamic load rating	29600000 mN
C0 - Static load rating	18200000 mN
Operating temperature min.	253,15 °K
Operating temperature max.	373,15 °K

OTHER FEATURES	
Mass	1,65 kg
Recommended tightening torque for set screw	11.5 N-m