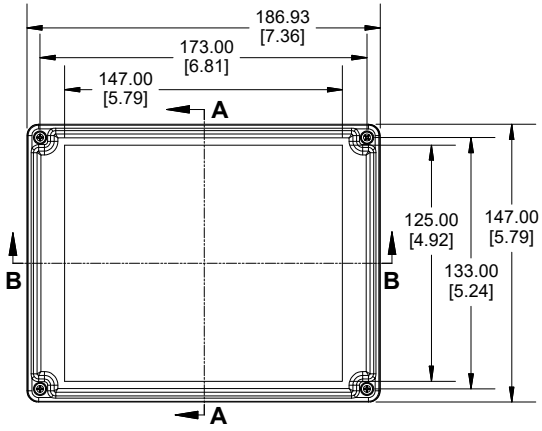


**TOP VIEW**

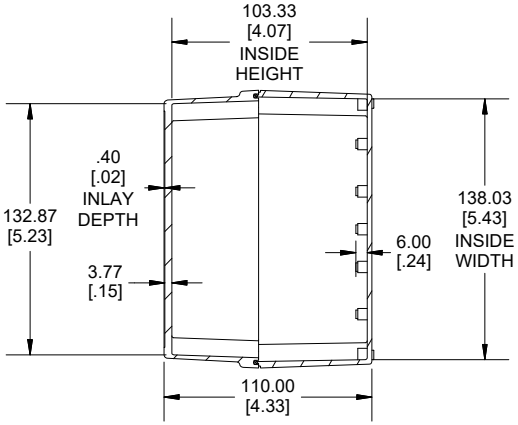


**END VIEW**
**SECTION A-A**

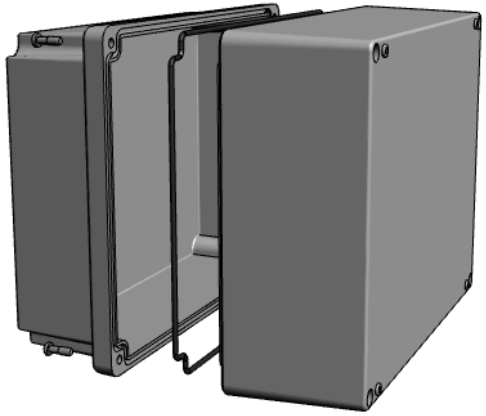

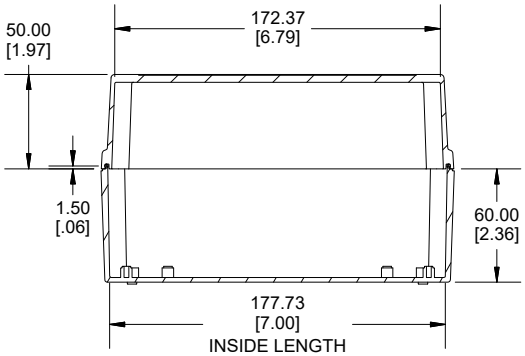


**SIDE VIEW**
**SECTION B-B**

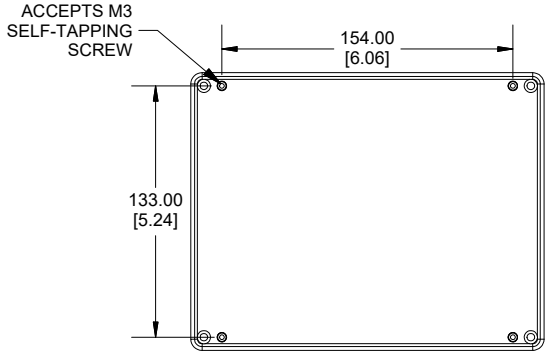


**MOUNTING HOLES**

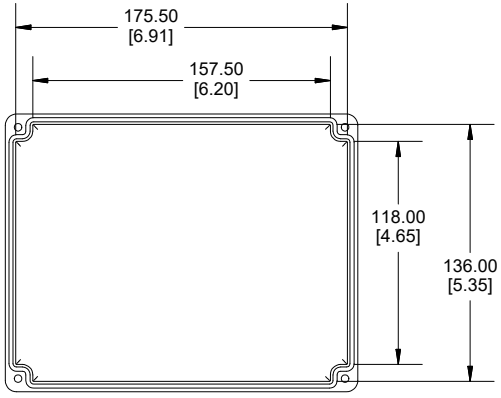


**INSIDE LID**

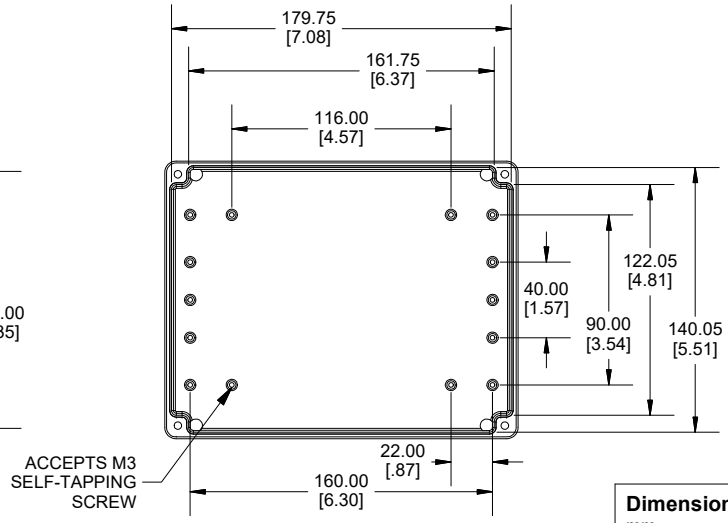


**INSIDE BOX**

Enclosures can be Factory Modified (Milling, Drilling, Printing etc.)
Contact Factory (modshop@hammfg.com) for quotes
Solid models of this enclosure available in .stp or .x_t
(Part number and text placement/orientation on our products are subject to change, we do not recommend using them as a locating reference for modification purposes)

| NOTE |
|---|
| Purchased assembly includes box, lid, string gasket, 4 PCB screws, and 4 lid screws. |
| Recommended Torque : (43-50) Ozf.in / (30-35) cN.m |

| RP Enclosure | |
|---|---|
| General Purpose ABS Light Grey (UL94 HB) | RP1385 |
| General Purpose ABS Light Grey with Polycarbonate Clear Lid (UL94 HB) | RP1385C |
| Polycarbonate Off-White (UL94-V2) | RP1380 |
| Polycarbonate Off-White with Clear Lid (UL94-V2) | RP1380C |
| **ACCESSORIES** | |
| Lid Screw (M3.5-0.6 X 10mm) (50 Pkg) | SC619-50 |
| PCB Screw (M3 X 6mm Self-tapping) (50 Pkg) | SC622-50 |
| General Purpose ABS Black Inner Panel 3mm Thick | STC128 |
| Metal Inner Panel 1mm Thick | STA128 |
| String Gasket EPDM Grey (2 Pkg) | RP128GASKET |

**Dimensions:**
mm
[inches]

HAMMOND MANUFACTURING®

# RP138

**www.hammondmfg.com**

REV14.02.2020