E40612

Process adapters clamp DIN 32676 series C (ASME BPE)

ADAPT DIN32676-C DN40

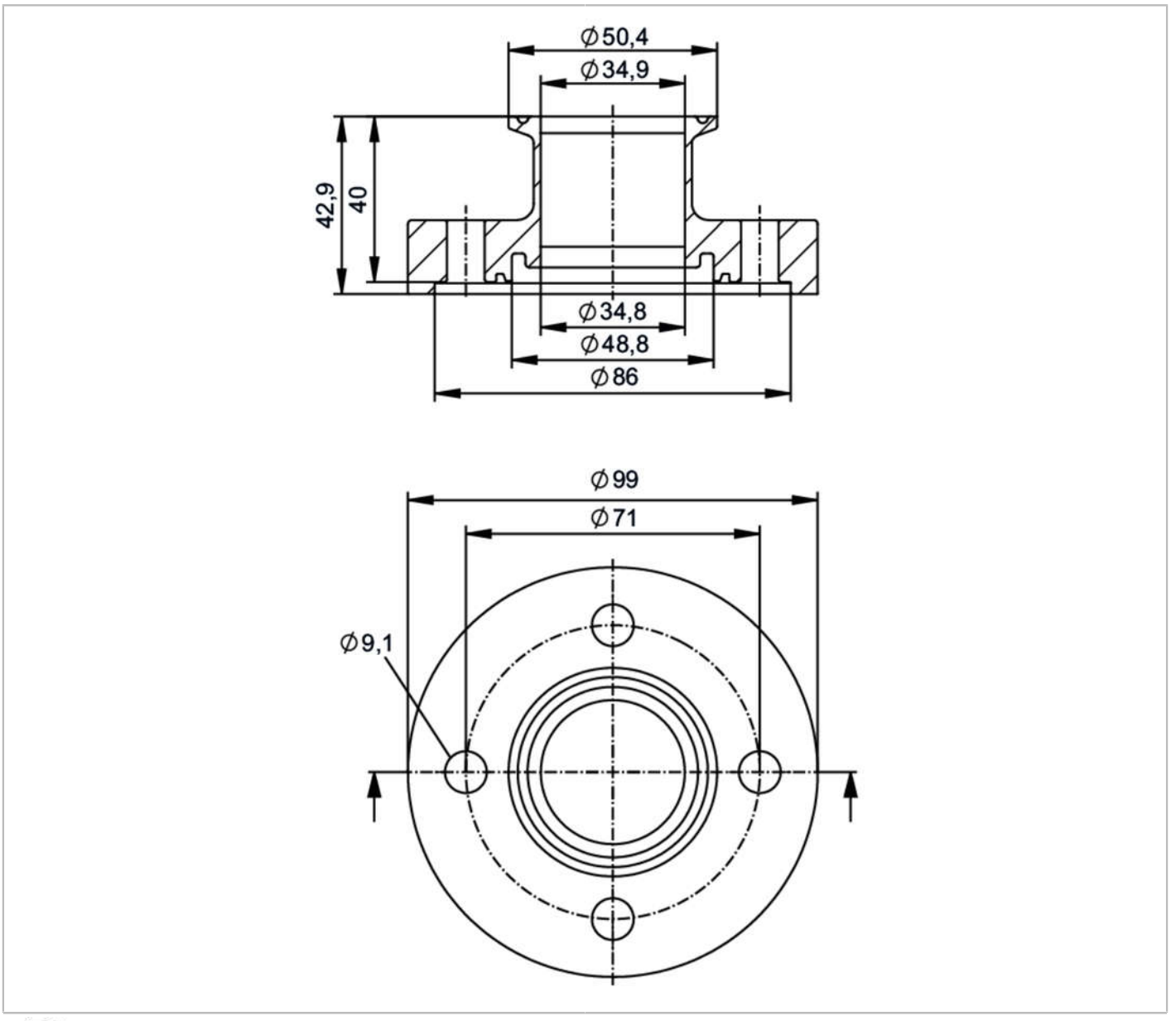

EC 1935/2004 FCM

Application			
Design		for volumetric flow meters SMF	
Application		food and beverage industry; hygienic systems	
Pressure rating		25 bar	2.5 MPa
Tests / approvals			
Pressure Equipment Directive		A possible classification to PED depends on the application and has to be carried out by the user / operator.	
Safety instructions		The compatibility between medium and product material has to be checked in all applications.	
Mechanical data			
Weight	[g]	2399.4	
Materials		stainless steel (316L/1.4404)	
Nominal diameter		DN40 (1 1/2“)	

E40612

Process adapters clamp DIN 32676 series C (ASME BPE)

ADAPT DIN32676-C DN40

Sensor connection	ifm-specific device flange
Process connection	Clamp DIN 32676 series C (ASME BPE)
Process connection suitable for pipe standard	(DIN EN 10357 series C); (DIN 11866 series C); (BS 4825 Part 1); (ISO 2037)
Surface characteristics Ra/Rz of the wetted parts	Ra ≤ 0.4 µm
Accessories	
Items supplied	screws 8
Remarks	
Pack quantity	2 pcs.