Product Data Sheet

9283118502
VWC0127AQGDS
5950 W

ebmpapst
The engineer's choice



GREEN TECH

5950 W

INDEX

1 General 3
2 Mechanics 3
2.1 General 3
2.2 Connections 4
3 Operating Data 5
3.1 Electrical Operating Data 5
3.2 Electrical Features 6
3.3 Aerodynamics 6
3.4 Sound Data 7
4 Environment 7
4.1 General 7
4.2 Climatic Requirements 8
5 Safety 8
5.1 Electrical Safety 8
5.2 Approval Tests 8
6 Reliability 8
6.1 General 9

1 General

Fan type	Fan
Rotating direction looking at rotor	Counterclockwise
Airflow direction	Air outlet over struts
Bearing system	Sleeve bearing
Mounting position - shaft	Any
Balancing grade	40,0

2 Mechanics

2.1 General

Width	127,0 mm	
Height	127,0 mm	
Depth	38,0 mm	
Diameter	0,0 mm	
Mass	0,570 kg	
Housing material	Metal	
Impeller material	Plastic	
Max. torque when mounted across both mounting flanges Screw size	Wire outlet corner: 200 Ncm Remaining corners: 410 Ncm ISO 4762 - M4 degreased, without an additional brace and without washer	

2.2 Connections

Electrical connection	Wires	
Lead wire length Tolerance	L = 270,0 mm +- 10,0 mm	
Tube length Tolerance	See drawing	
Wire size (AWG)	22	
Insulation diameter	1,70 mm	
Plug	See drawing	
Contact	See drawing	

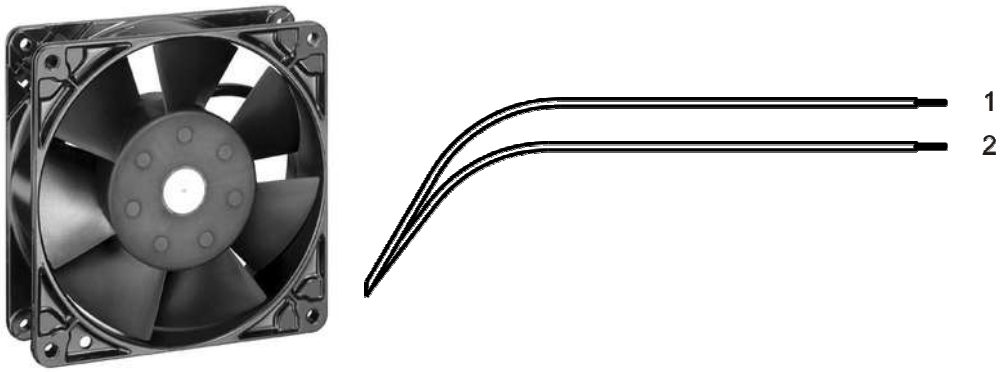

	Color	Operation
1	black	L
2	black	N

3 Operating Data

3.1 Electrical Operating Data

Measurement conditions:	Normal air density = 1,2 kg/m3; Temperature 23℃ +/- 3℃; Motor axis horizontal;warm-up time before measuring 5 minutes (unless otherwise specified). In the intake and outlet area should not be any solid obstruction within 0,5 m.

∆p = 0: corresp. to free air flow (see chapter aerodynamics)
I: corresp. to RMS line current

Features	Condition	Symbol	Values	
Frequency	∆p = 0	f	50 Hz	60 Hz
Nominal voltage Tolerance	∆p = 0	U_N	230 V + 6 % - 10 %	230 V + 6 % - 10 %
Power consumption Tolerance	∆p = 0	P	18 W + 5 % - 10 %	17 W + 5 % - 10 %
Speed Tolerance	∆p = 0	n	2.700 1/min +- 5 %	3.050 1/min +- 5 %

3.2 Electrical Features

Locked rotor protection	Impedance
Locked rotor current at	

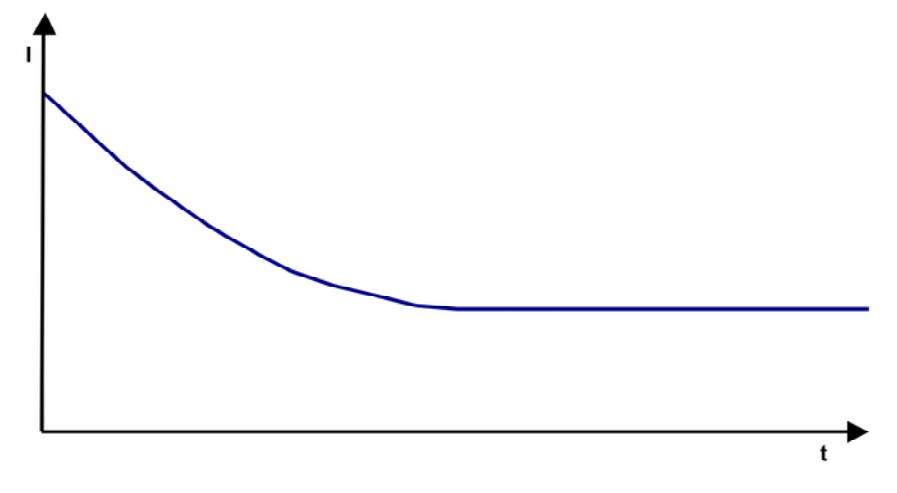

3.3 Aerodynamics

Measurement conditions:

Measured with a double chamber intake rig acc. to DIN EN ISO 5801.
Normal air density = 1,2 kg/m3; Temperature 23℃ +/ - 3℃;
In the intake and outlet area should not be any solid obstruction within 0,5 m. Motor shaft horizontal.
The information is only valid under the specified test conditions and may be changed by the installation conditions. If there are deviations from the standard test conditions, the characteristic values must be checked under the installed conditions.

a.) Operation condition:
2.700 1/min at free air flow Frequency: 50 Hz

Max. free-air flow (Δp = 0 / V̇ = max.)	172,0 m3/h
Max. static pressure (Δp = max. / V̇ =0)	72 Pa

b.) Operation condition:
3.050 1/min at free air flow Frequency: 60 Hz

Max. free-air flow (Δp = 0 / V̇ = max.)	198,0 m3/h
Max. static pressure (Δp = max. / V̇ =0)	55 Pa

3.4 Sound Data

Measurement conditions:	Sound pressure level: 1 meter distance between microphone and the air intake. Sound power level: Acc. to DIN 45635 part 38 (ISO 10302)Sound power level: Acc. to DIN 45635 part 38 (ISO 10302) Measured in a semianchoic chamber with a background noise level of Lp(A) < 5 dB(A) For further measurement conditions see chapter aerodynamics.

a.) Operation condition:
2.700 1/min at free air flow Frequency: 50 Hz

Optimal operating point	143,0 m3/h @ 21 Pa	
Sound power level at the optimal operating point	5,4 bel(A)	
Sound pressure level at free air flow, measured in rubber bands	42,0 dB(A)	

b.) Operation condition:
3.050 1/min at free air flow Frequency: 60 Hz

Optimal operating point	152,0 m3/h @ 27 Pa	
Sound power level at the optimal operating point	5,7 bel(A)	
Sound pressure level at free air flow, measured in rubber bands	46,0 dB(A)	

4 Environment

4.1 General

Min. permitted ambient temperature TU min.	-20 ℃ / 50 Hz -20 ℃ / 60 Hz	
Max. permitted ambient temperature TU max.	50 ℃ / 50 Hz 55 ℃ / 60 Hz	
Min. permitted storage temperature TL min.	-40 ℃	
Max. permitted storage temperature TL max.	80 ℃	

4.2 Climatic Requirements

Humidity requirements	humid heat, constant; according to DIN EN 60068-2-78, 14 days	
Water exposure	None	
Dust requirements	None	
Salt fog requirements	None	

Permitted application area:
The product is intended for use in sheltered rooms with controlled temperature and controlled humidity. Directly exposure to water must be avoided.

Pollution degree 1 (according DIN EN 60664-1)
There is either no pollution or it occurs only dry, non-conductive pollution. The pollution has no negative impact.

5 Safety

5.1 Electrical Safety

Dielectric strength DIN EN 60950 (VDE 0805) and DIN EN 60335 (VDE 0700) A.) Type test Measuring conditions: After 48h of storage at 95% R.H. and 25℃. No arcing or breakdown is allowed! All connections together to ground. B.) Routine test Measuring conditions: At indoor climate. No arcing or breakdown is allowed! All connections together to ground.	1500 VAC / 1 Min. 1500 VAC / 1 Sec.
Isolation resistance Measuring conditions: After 48h of storage at 95% R.H. and 25℃ measured with U=500 VDC for 1 min.	RI > 50 MOhm
Clearance / creepage distance	2,0 mm / 1,8 mm
Protection class	I

5.2 Approval Tests

CE	EC Declaration of Conformity	Yes
EAC	Eurasian Conformity	Yes
UL	Underwriters Laboratories	Yes / UL507, Electric Fans E38324
VDE	Association for Electrical, Electronic and Information Technologies	Yes / Approval acc. to EN 60335 (VDE 0700) - Safety for household and similar electrical appliances
CSA	Canadian Standards Association	Yes / C22.2 No. 113 Fans and Ventilators
CCC	China Compulsory Certification	Yes / GB 12350 Safety Requirements for small Power Motors

The approval tests are observed to:
U approval max.: 230 V / f: 60 Hz @ TU approval max.: 75 ℃

6 Reliability

6.1 General

Life expectancy L10 at TU = 40 ℃	40.000 h / 50 Hz 42.500 h / 60 Hz	
Life expectancy L10 at TU max.	32.500 h / 50 Hz 30.000 h / 60 Hz	

Copying of this document, and giving it to others and the use or communication of the contents thereof, are forbidden without express authority. Offenders are liable to the payment of damages. All rights are reserved in the event of the grant of a patent or the registration of a utility model or design.

Schutzvermerk nach DIN 34 beachten

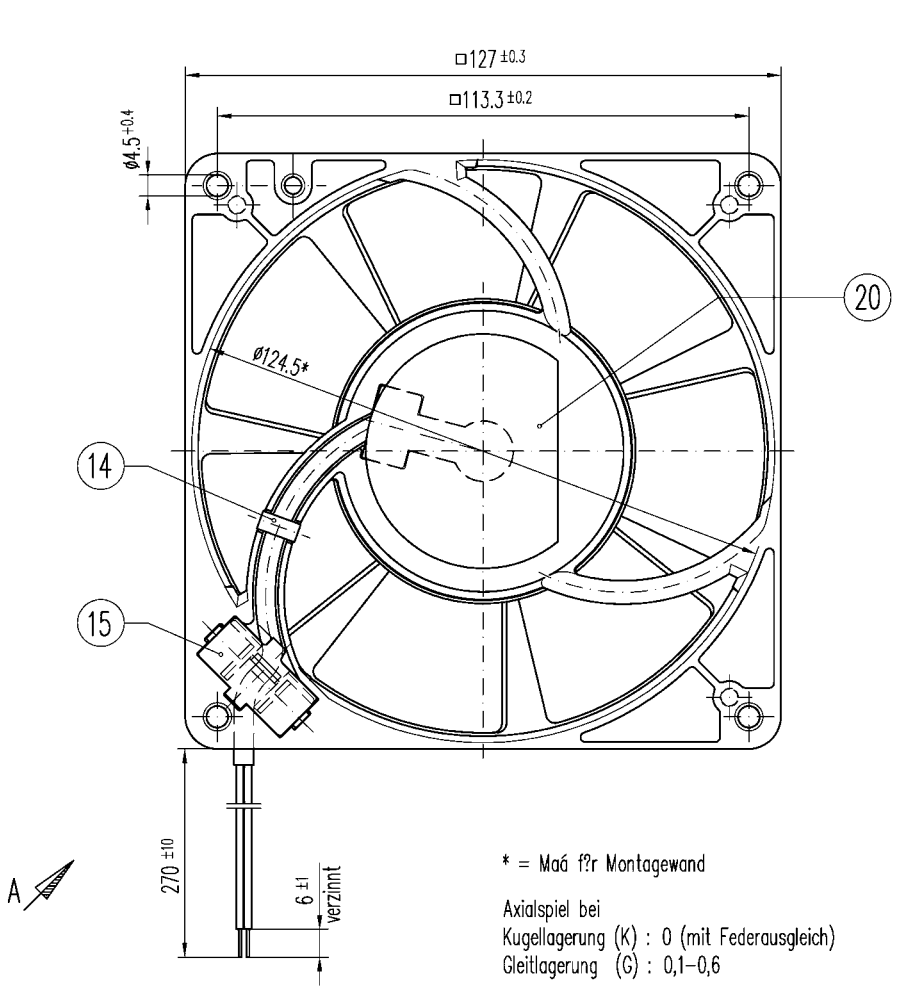

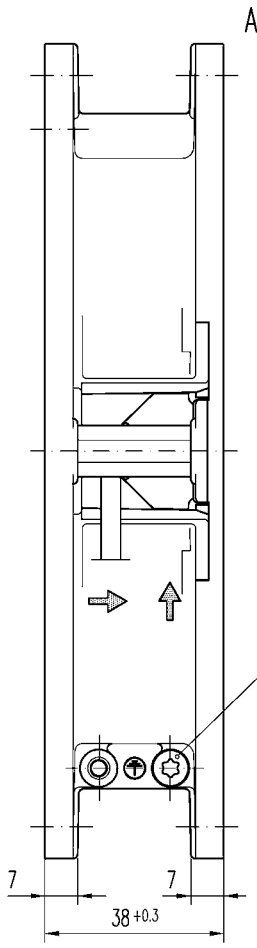

Ⓕ Schraube: Duo-Taptite nach DIN 7500, CM 4x8, Torx

* = Maá f?r Montagewand

Axialspiel bei
Kugellagerung (K) : 0 (mit Federausgleich)
Gleitlagerung (G) : 0,1-0,6

gilt f?r						
	G	928 3118 512	W2K121-AA15-03-512			
	G	928 3118 511	W2K121-AA01-03-511			
	G	928 3118 504	W2K121-AA15-03			
	G	928 3118 502	W2K121-AA01-03			
	K	928 3118 107	W2K121-AA01-06			
	K	928 3118 104	W2K121-AA15-01	K	928 3118 303	5908 W
	K	928 3118 100	W2K121-AA01-01	K	928 3118 301	5958 W

Allgemeintoleranzen

Index	Änd.-Nr.	Datum	Geändert von
f	131/97	27.02.97	Nuber J.
e	163/95	07.10.95	Nuber J.
d	221/94	17.10.94	Nuber J.
c	167/94	25.05.94	Knapp U.
b	60/94	24.02.94	Knapp U.

Zur Verwendung im Verteiler freigegeben von Wrobel G. am

	Datum	Name
Erstellt		Knapp U.
Gepr?ft		Wrobel G.

PAPST
PAPST-MOTOREN GmbH & Co KG
D-78112 St.Georgen
Germany

Artikel

Maßstab 1:1

Zchg.-Nr.

Blatt

Ers.f.Zchg.: W2K121-A

:\

516
3...
045
243
240
235
232
231
210