EVC231

Connection cable

VDOAF030MSS00,6H03STGH030MSS

Please see the technical note under "Downloads"

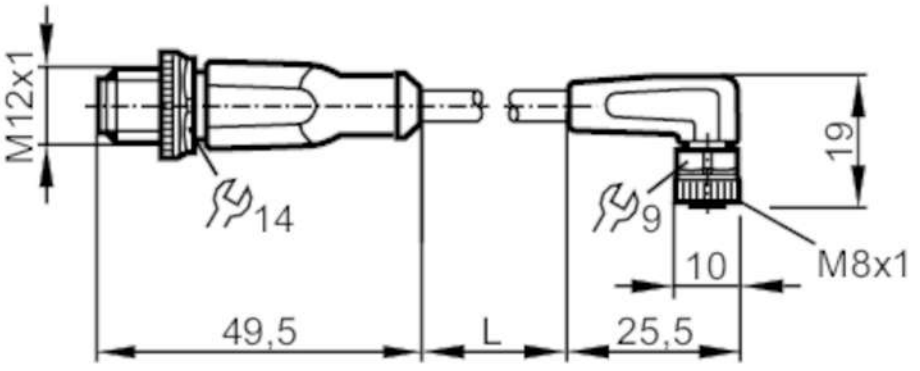

Application		
Special feature		Free from silicone; Halogen-free; Gold-plated contacts; Drag chain suitability
Free from silicone		yes
Electrical data		
Operating voltage	[V]	< 50 AC / < 60 DC
Protection class		III
Max. current load total	[A]	3
Operating conditions		
Ambient temperature	[°C]	-25...90
Note on ambient temperature		cULus: ...75
Ambient temperature (moving)	[°C]	-25...90
Note on ambient temperature (moving)		cULus: ...75
Protection		IP 65; IP 67; IP 68; IP 69K
Mechanical data		
Weight	[g]	44.7
Materials		housing: TPU orange; Sealing: FKM
Material nut		brass, nickel-plated
Drag chain suitability		yes

EVC231

Connection cable

VDOAF030MSS00,6H03STGH030MSS

Drag chain suitability	bending radius for flexible use	min. 10 x cable diameter
	travel speed	max. 3.3 m/s for a horizontal travel length of 5 m and max. acceleration of 5 m/s²
	bending cycles	> 5 Mio.
	torsional strain	± 180 °/m

Remarks

Notes	Please see the technical note under "Downloads"
Pack quantity	1 pcs.

Electrical connection - plug

Connector: 1 x M12, straight; coding: A; Locking: brass, nickel-plated; Contacts: gold-plated; Tightening torque: 0.6...1.5 Nm

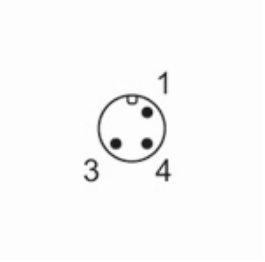

Electrical connection

Cable: 0.6 m, PUR, Halogen-free, black, Ø 4.3 mm; 3 x 0.34 mm² (42 x Ø 0.1 mm)

Connection

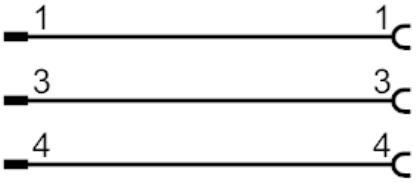

Electrical connection - socket

Connector: 1 x M8, angled; coding: A; Locking: brass, nickel-plated; Contacts: gold-plated; Tightening torque: 0.3...0.5 Nm

