Model 3957
BNC (Male) to Multi-Stacking Banana Plugs

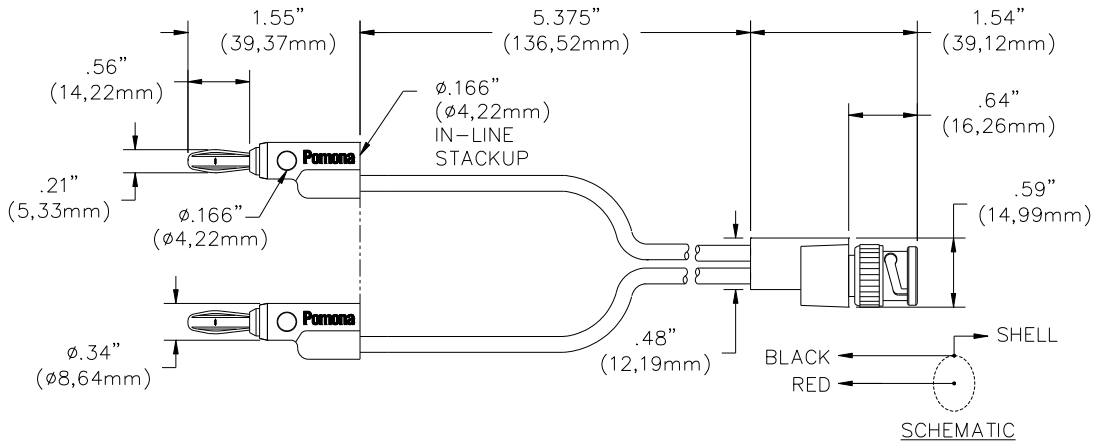

FEATURES:

- Converts BNC (Female) cables/connectors to top/side stackable banana plugs for test versatility.
- BNC connector and banana plugs are molded directly to the wire for pull strength durability and dust/moisture resistance.
- BNC dielectric is PTFE for superior temperature performance
- BNC center contact is gold plated for corrosion resistance, low contact resistance and long insertion life.

MATERIALS:

BNC: Body - Brass, Nickel Plated
Center Contact – Brass, Gold Plated.
Dielectric: PTFE
Wire: 18 AWG, Stranding 65 x 36 T.C., PVC Insulated, .144" (3,66mm) O.D., Color matches banana plugs
Marking: "POMONA 3957"
Banana Plugs: Body – Brass Nickel Plated
Spring – Beryllium Copper, Nickel Plated
Insulation: Polypropylene Color: One Red, One Black

RATINGS:

Operating Voltage: Hand-Held testing: 30VAC/60VDC Max.
Hands free testing in controlled voltage environments: 500 VRMS Max.
Operating Temperature: +55°C (+131°F) Max.

ORDERING INFORMATION: Model 3957
Custom lengths are available, contact Pomona Technical support: 800-241-2060 (Technicalsupport@pomonatest.com)

All dimensions are in inches. Tolerances (except noted): .xx = ±.02" (,51 mm), .xxx = ± .005" (,127 mm).
All specifications are to the latest revisions. Specifications are subject to change without notice.
Registered trademarks are the property of their respective companies.