DM0T0150

CURRENT TRANSFORMER, SOLID-CORE, FOR Ø22MM CABLE, 150A



Product designation			Current trasformers
Product type designation			DM0T0150
Auxiliary supply Us			
Operational frequency			
	min	Hz	50
	max	Hz	60
Current inputs			
Primary current Ipn (/5)		A	150
Secondary output current		A	5
Overload withstand Ipn		%	120
Burden			
	cl. 1	VA	2
Insulations			
Rated insulation voltage Ui IEC/EN		V	720
IEC rated short-time thermal current Ith		Ith for s	40…60
IEC rated dynamic current Idyn		Ith for s	2.5
Insulation dry type			Class E
Mechanical features			
Terminals type			Screw
Fixing			DIN rail or by Screw
Weight		g	200
Ambient conditions			
Temperature			
Operating temperature			
	min	°C	-25
	max	°C	+50
Storage temperature			
	min	°C	-40
	max	°C	+80
Relative humidity		%	90
Protection degree			IP30
Dimensions			

The characteristics described in this document are subject to updates or modifications at any time. The descriptions, technical and functional information, illustrations and instructions in this brochure are purely illustrative, and are consequently not contractually binding

DM0T0150

CURRENT TRANSFORMER, SOLID-CORE, FOR Ø22MM CABLE, 150A

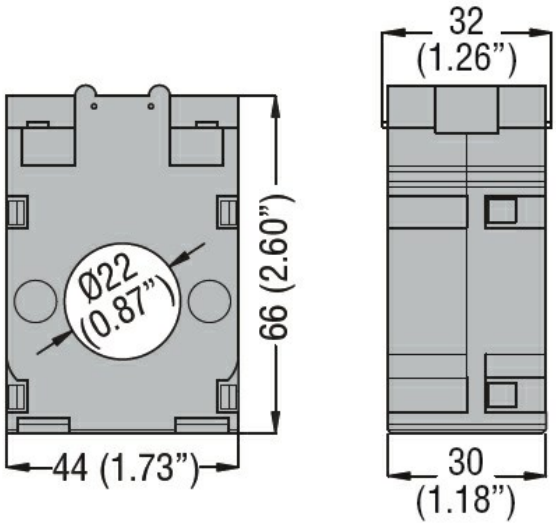

Certifications and compliance

Compliance	
	IEC/EN 61869-1
	IEC/EN 61869-2
Certificates	
	EAC
	GOST

The characteristics described in this document are subject to updates or modifications at any time. The descriptions, technical and functional information, illustrations and instructions in this brochure are purely illustrative, and are consequently not contractually binding