TABLE 1

MOLEX P/N	ENG. NO.	CABLE LENGTH (mm)	LED
1202510095	BKB814P-FBW-003	300	YES
1202510096	BKB814P-FBW-006	600	YES

TABLE 2 BILL OF MATERIAL

ITEM	DESCRIPTION	MATERIAL	FINISH
1	LABEL	ABS	WHITE
2	CABLE PLATE	PBT	BLACK
3	CABLE	TPU BASED	BLACK
4	CONTACT	BRONZE	GOLD OVER NICKEL
5	O-RING	FPM	RED
6	LED	NON LED = PA	BLACK
		WITH LED = PA	TRANSPARENT
7	SHELL	BRASS	NICKEL PLATED
8	HOUSING	PBT	BLACK
9	OVERMOLD	PUR	BLACK
10	O-RING	NBR	BLACK
11	SHELL	BRASS	NICKEL PLATED
12	CONTACT	BRONZE	GOLD OVER NICKEL
13	O-RING	NBR	BLACK

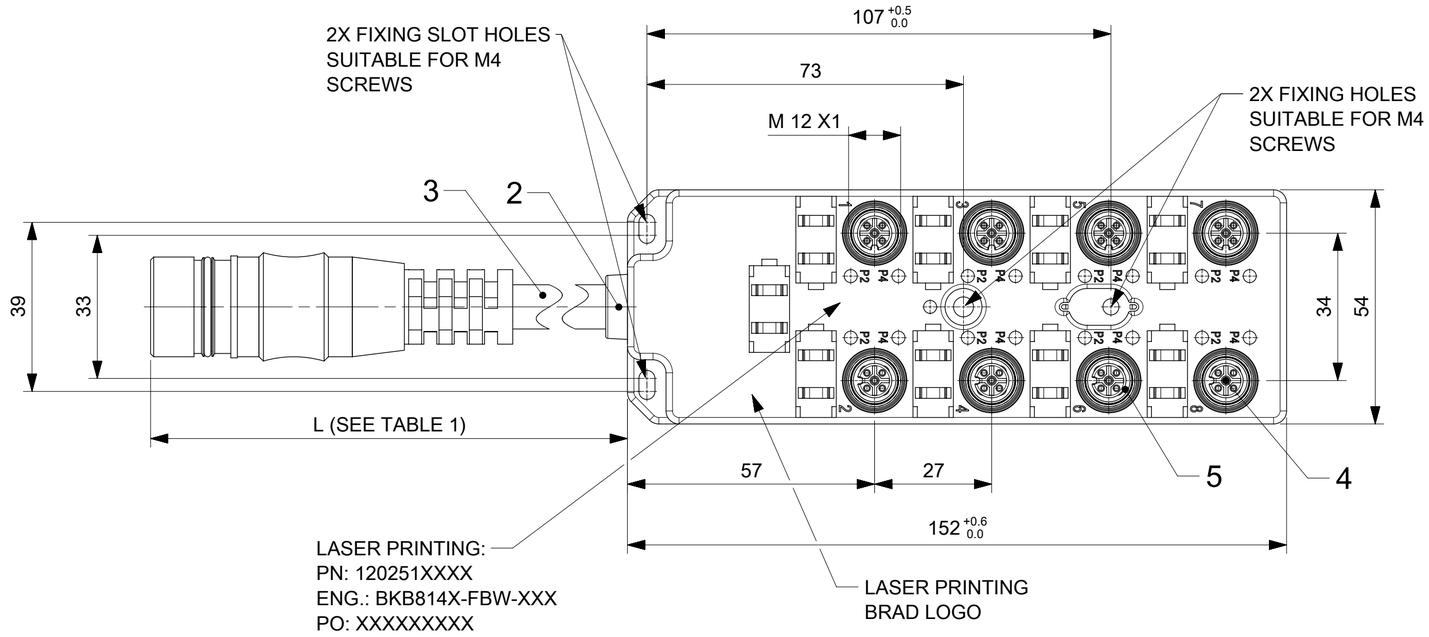

PIN	COLOR
1	VIOLET
2	RED
3	GREY
4	RED/BLUE
5	GREEN
6	BLUE
7	GREY/PINK
8	WHITE/GREEN
9	WHITE/YELLOW
10	WHITE/GREY
11	BLACK
12	YELLOW/GREEN
13	YELLOW/BROWN
14	BROWN/GREEN
15	WHITE
16	YELLOW
17	PINK
18	GREY/BROWN
19	BROWN

M23 19 POLE
FRONT VIEW

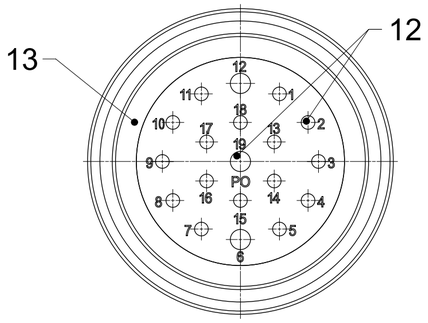

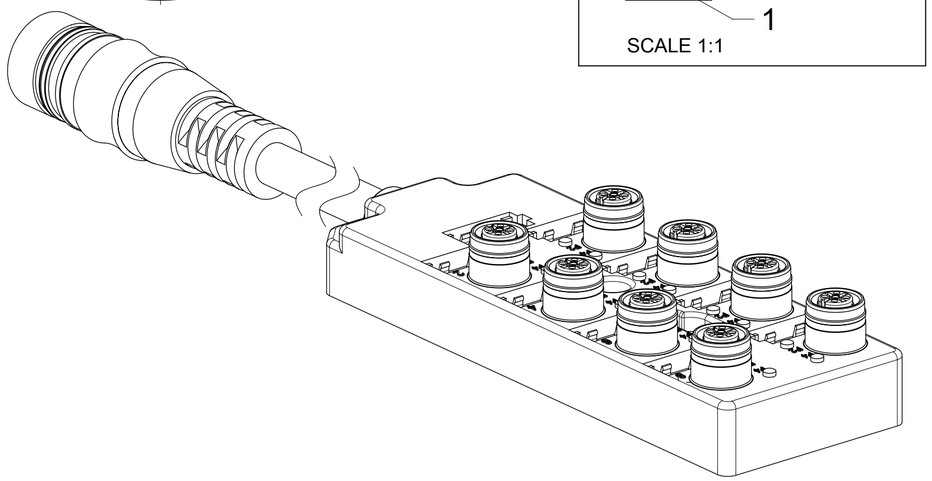

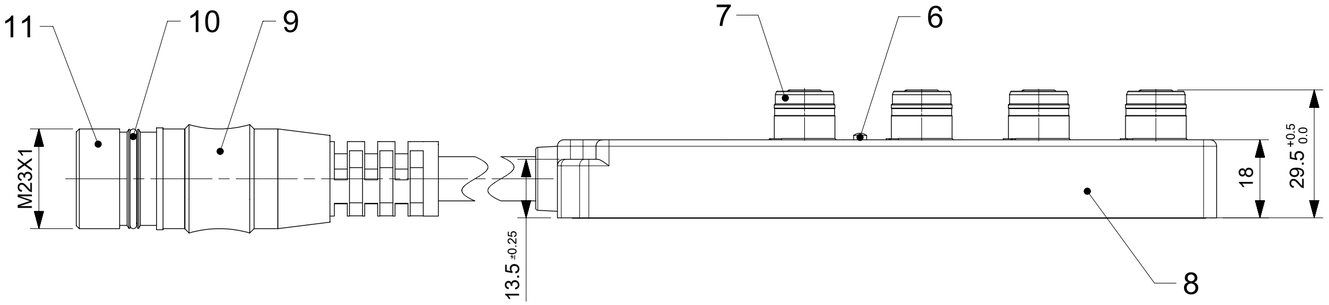

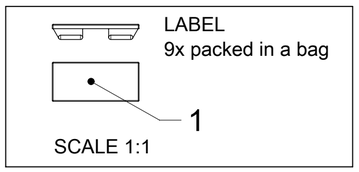

GENERAL CHARACTERISTICS:

ELECTRICAL AND MECHANICAL DATA ACC. TO IEC 61076-2-101

NOMINAL VOLTAGE:	10-30 V DC
AMPERE RATING:	4 A PER PORT / 12 A MAX
AMPERE RATING WITH UL REGISTRATION:	3 A PER PORT / 9 A MAX
IP DEGREE OF PROTECTION:	IP 67
TEMPERATURE RANGE:	-25°C to + 85°C

SYMBOLS: FA = 0; FE = 0; FP = 0; S = 0; ▼ = 0; FC = 0; ☒ = 0; ■ = 0; V = 0

THIS DRAWING CONTAINS INFORMATION THAT IS PROPRIETARY TO MOLEX ELECTRONIC TECHNOLOGIES, LLC AND SHOULD NOT BE USED WITHOUT WRITTEN PERMISSION

DIMENSION UNITS: mm | SCALE: 1:1

GENERAL TOLERANCES (UNLESS SPECIFIED)

ANGULAR TOL	±	1.0 °
4 PLACES	±	
3 PLACES	±	
2 PLACES	±	0.05
1 PLACE	±	0.3
0 PLACES	±	0.5

DRAFT WHERE APPLICABLE MUST REMAIN WITHIN DIMENSIONS

CURRENT REV DESC: INITIAL RELEASE

EC NO: 631635

DRWN:	MDHARMANTI	2020/01/28
CHK'D:	RSILLER	2020/02/05
APPR:	RSILLER	2020/02/05

INITIAL REVISION:

DRWN:	SSM	2019/01/04
APPR:	RSILLER	2020/01/17

THIRD ANGLE PROJECTION | DRAWING: A2-SIZE | SERIES: 120251

molex

MPIS U12 PNP 5P 8PT 0.3M M23 19P BK

PRODUCT CUSTOMER DRAWING

DOCUMENT NUMBER	DOC TYPE	DOC PART	REVISION
1202510095	PSD	000	A1

MATERIAL NUMBER	CUSTOMER	SHEET NUMBER
SEE TABLE 1	GENERAL MARKET	1 OF 2

DOCUMENT STATUS	P1	RELEASE DATE	2020/02/05 10:52:04

FORMAT: master-tb-prod-A2
REVISION: H
DATE: 2018/01/18

Wiring Diagram PNP Dual

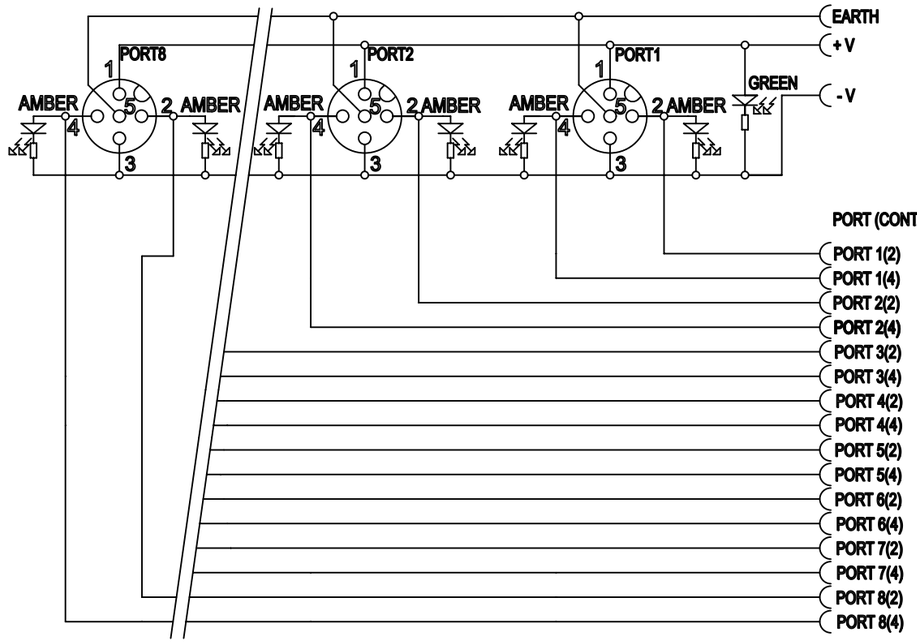

FUNCTION	PIN NUMBER
EARTH	12
+V	19
-V	6
PORT (CONTACT)	
PORT 1(2)	7
PORT 1(4)	15
PORT 2(2)	4
PORT 2(4)	5
PORT 3(2)	8
PORT 3(4)	16
PORT 4(2)	14
PORT 4(4)	3
PORT 5(2)	9
PORT 5(4)	17
PORT 6(2)	13
PORT 6(4)	2
PORT 7(2)	10
PORT 7(4)	11
PORT 8(2)	18
PORT 8(4)	1

CABLE LENGTH TOLERANCES

LENGTH [m]	TOLERANCE [mm]
0-1	+40
>1-5	+60
>5-10	+80
>10-20	+140
>20-30	+160
>30	+1% length

SYMBOLS
E = 0
E = 0
E = 0
S = 0
▼ = 0
C = 0
☒ = 0
■ = 0
▽ = 0

THIS DRAWING CONTAINS INFORMATION THAT IS PROPRIETARY TO MOLEX ELECTRONIC TECHNOLOGIES, LLC AND SHOULD NOT BE USED WITHOUT WRITTEN PERMISSION

DIMENSION UNITS	SCALE
mm	1:1

GENERAL TOLERANCES (UNLESS SPECIFIED)

ANGULAR TOL	±	1.0 °
4 PLACES	±	
3 PLACES	±	
2 PLACES	±	0.05
1 PLACE	±	0.3
0 PLACES	±	0.5

DRAFT WHERE APPLICABLE MUST REMAIN WITHIN DIMENSIONS

CURRENT REV DESC: INITIAL RELEASE

EC NO: 631635
DRWN: MDHARMANTI 2020/01/28
CHK'D: RSILLER 2020/02/05
APPR: RSILLER 2020/02/05

INITIAL REVISION:
DRWN: SSM 2019/01/04
APPR: RSILLER 2020/01/17

molex

MPIS U12 PNP 5P 8PT 0.3M M23 19P BK

PRODUCT CUSTOMER DRAWING

DOCUMENT NUMBER	DOC TYPE	DOC PART	REVISION
1202510095	PSD	000	A1

THIRD ANGLE PROJECTION	DRAWING	SERIES	MATERIAL NUMBER	CUSTOMER	SHEET NUMBER
	A3-SIZE	120251	SEE TABLE 1	GENERAL MARKET	2 OF 2

DOCUMENT STATUS	P1	RELEASE DATE	2020/02/05 10:52:04

FORMAT: master-lb-prod-A3
REVISION: H
DATE: 2018/01/18