TK7460

Temperature switch with intuitive switch point setting

TK-250CLFR12-QKPKG / US

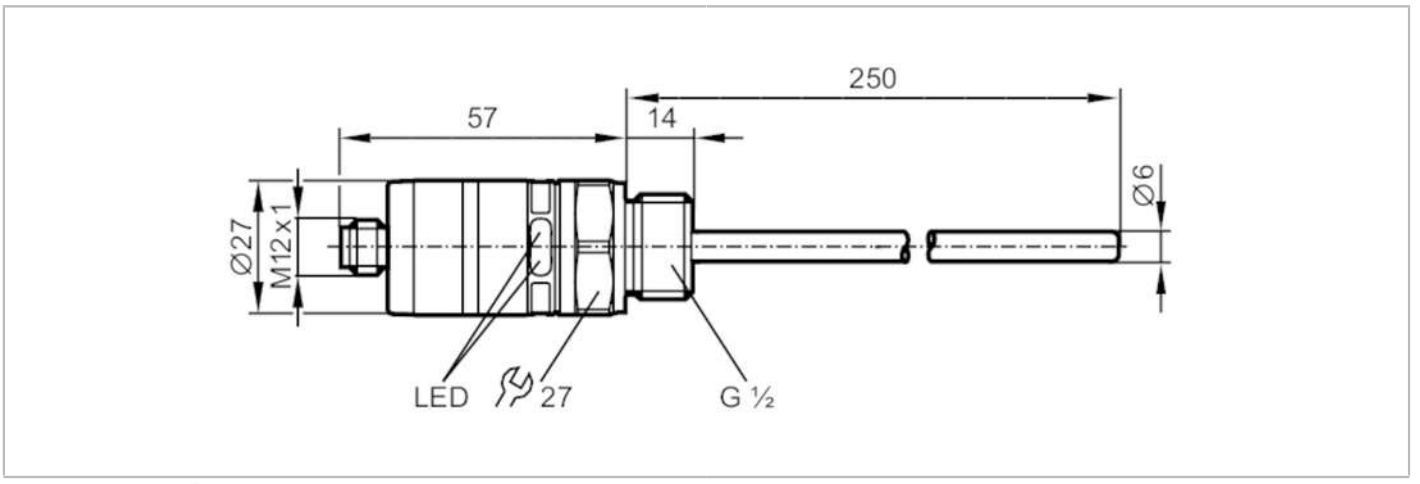

Product characteristics			
Number of inputs and outputs		Number of digital outputs: 2	
Measuring range		-25...140 °C	-13...284 °F
Process connection		threaded connection G 1/2 external thread	
Installation length EL	[mm]	250	
Application			
Special feature		Gold-plated contacts	
Measuring element		1 x Pt 1000; (to DIN EN 60751, class A)	
Media		liquids and gases	
Medium temperature	[°C]	-40...145	
Pressure rating		300 bar	30 MPa
Electrical data			
Operating voltage	[V]	9.6...32 DC; ("supply class 2" to cULus)	
Current consumption	[mA]	< 30	
Protection class		III	
Reverse polarity protection		yes	
Power-on delay time	[s]	0.5	
Inputs / outputs			
Number of inputs and outputs		Number of digital outputs: 2	
Outputs			
Total number of outputs		2	
Output signal		switching signal	
Electrical design		PNP	
Number of digital outputs		2	
Output function		normally open / normally closed	
Max. voltage drop switching output DC	[V]	2	
Permanent current rating of switching output DC	[mA]	500	
Short-circuit protection		yes	

TK7460

Temperature switch with intuitive switch point setting

TK-250CLFR12-QKPKG / US

Type of short-circuit protection		pulsed	
Overload protection		yes	
Measuring/setting range			
Probe length L	[mm]	236	
Measuring range		-25...140 °C	-13...284 °F
Set point SP		-20...140 °C	-4...284 °F
Accuracy / deviations			
Temperature drift per 10 K	[K]	0.1 **)	
Repeatability	[K]	± 0,1	
Setting accuracy	[K]	± 3	
Response times			
Dynamic response T05 / T09	[s]	1 / 3; (to DIN EN 60751)	
Software / programming			
Adjustment of the switch point		setting rings	
Operating conditions			
Ambient temperature	[°C]	-40...80	
Note on ambient temperature		at medium temperature: < 80 °C	
		-40...50 °C	
		at medium temperature: < 145 °C	
Storage temperature	[°C]	-40...100	
Protection		IP 67	
Tests / approvals			
EMC		DIN EN 61000-4-2 ESD	4 kV CD / 8 kV AD
		EN 61000-4-3 HF radiated	10 V/m
		DIN EN 61000-4-4 Burst	2 kV
		EN 61000-4-6 HF conducted	10 V
Shock resistance		DIN IEC 68-2-27	50 g (11 ms)
Vibration resistance		DIN EN 60068-2-6	20 g (10...2000 Hz)
MTTF	[years]	643.1	
UL approval		UL Approval no.	K018
Mechanical data			
Weight	[g]	142	
Housing		cylindrical	
Dimensions	[mm]	Ø 27 / L = 307	
Materials		stainless steel (316L/1.4404); PC; PBT; FKM	
Materials (wetted parts)		stainless steel (316L/1.4404); FKM	
Tightening torque	[Nm]	45	
Process connection		threaded connection G 1/2 external thread	
Probe diameter	[mm]	6	
Installation length EL	[mm]	250	
Displays / operating elements			
Display		switching status	2 x LED, yellow

TK7460

Temperature switch with intuitive switch point setting

TK-250CLFR12-QKPKG / US

Remarks	
Remarks	**) in case of deviation from the reference condition 25 °C
	The values for accuracy apply to flowing water.
Pack quantity	1 pcs.

Electrical connection

Connector: 1 x M12; coding: A; Contacts: gold-plated



Connection

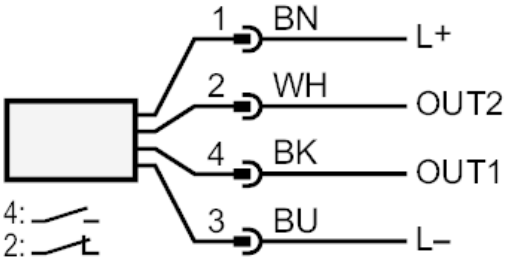

colours to DIN EN 60947-5-2
Core colours :

BK =	black
BN =	brown
BU =	blue
WH =	white