# GMX62

DOOR-COUPLING HANDLE. FOR GMF J600...GMF L800. SCREW FIXING. 175MM/6.89”
LEVER LENGTH PISTOL HANDLE - DEFEATABLE (REQ. UL508A). RED/YELLOW. □12MM/0.47”




## Dimensions

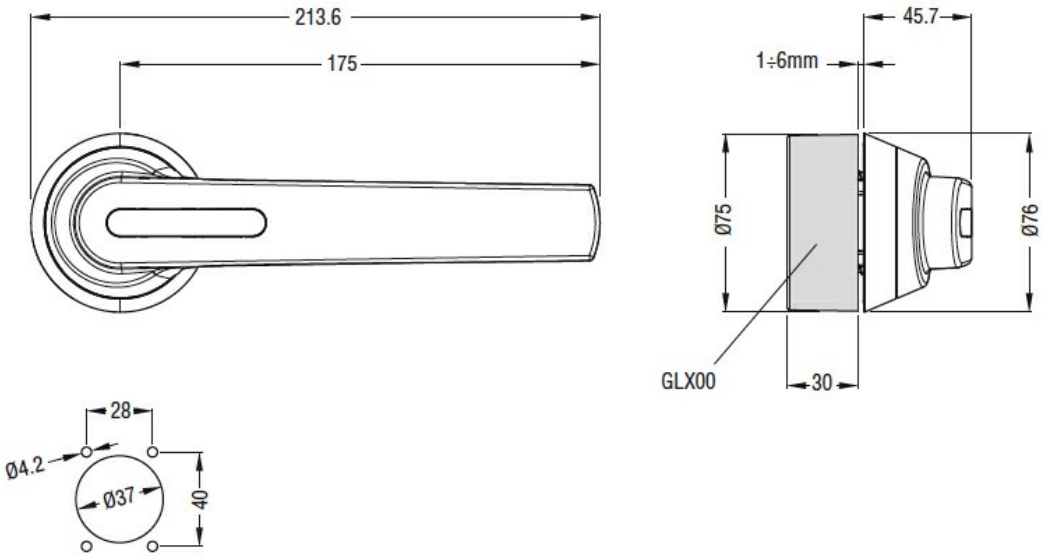


## Certifications and compliance

Compliance

| | |
|---|---|
| | IEC/EN 60947-1 |
| | IEC/EN 60947-3 |

Certifications

| | |
|---|---|
| | cULus |

## ETIM classification

| | |
|---|---|
| ETIM 8.0 | EC000230 - Door coupling handle for switchgear |


The characteristics described in this document are subject to updates or modifications at any time. The descriptions, technical and functional information, illustrations and instructions in this brochure are purely illustrative, and are consequently not contractually binding