MULTI-TOOL SET - 126 PIECES | E113214



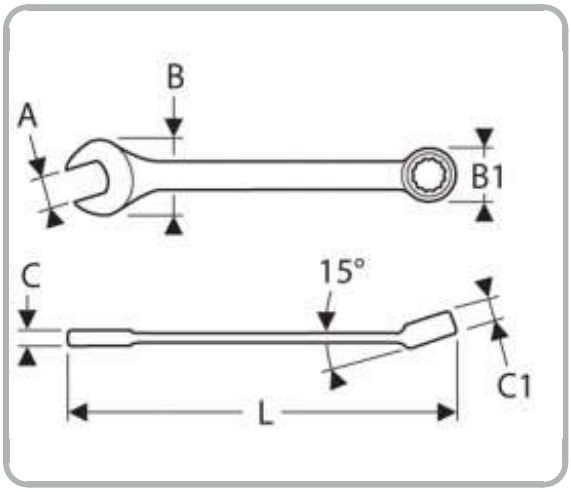

Description

- metric 1/4" 6-point sockets: 4-4.5-5-5.5-6-7-8-9-10-11-12-13-14 mm.
- Metric 1/4" 6-point long reach sockets: 4-5-5.5-6-7-8-9-10-11-12-13-14 mm.
- Inch 1/4" 6-point sockets: 3/16"-7/32"-1/4"-9/32"-5/16"-11/32"-3/8"-7/16"-1/2"-9/16".
- Inch 1/4" 6-point long reach sockets: 3/16"-7/32"-1/4"-9/32"-5/16"-11/32"-3/8"-7/16"-1/2"-9/16".
- metric 3/8" 6-point sockets: 10-11-12-13-14-15-16-17-18-19 mm.
- Metric 3/8" 6-point long reach sockets: 10-11-12-13-14-15-16-17-18-19 mm.
- Inch 3/8" 6-point sockets: 1/4"-5/16"-11/32"-3/8"-7/16"-1/2"-9/16"-5/8"-11/16"-3/4"-13/16"-7/8"-15/16"-1”.
- Inch 3/8" 6-point long reach sockets: 1/4"-5/16"-3/8"-7/16"-1/2"-9/16"-5/8"-11/16"-3/4"-13/16"-7/8"-15/16"-1”.
- Metric combination wrenches: 10-11-12-13-14-15-16-17-18-19 mm.
- Inch combination wrenches: 5/16"-11/32"-3/8"-7/16"-1/2"-9/16"-5/8"-11/16"-3/4”.
- 2 1/4" and 3/8" parking meter locking ratchets.
- 2 1/4" extensions: 55-150 mm and 1 3/8" extension: 125 mm.
- 2 1/4" and 3/8" universal joints.
- 1/4" - 3/8" coupler
- 3/8"- 1/4" coupler
- Screwdriver: - slotted head: 3x50 - 4x100 - 5.5x125. - Phillips®: PH0x75 - PH1x100 - PH2x125.

Information

EAN	3258951132142
A [mm]	19
B [mm]	42.2
B1 [mm]	29
C [mm]	7.1
C1 [mm]	10.4
L [mm]	230
Conditioning	1
[g]	165