nVent SCHROFF

30848-318 PLUG-IN UNIT U-PROFILE FRONT PANEL FOR IEL, IET, TYPE 2 HANDLE, 6 U, 6 HP, 2.5 MM, AL, FRONT ANODIZED, REAR CONDUCTIVE



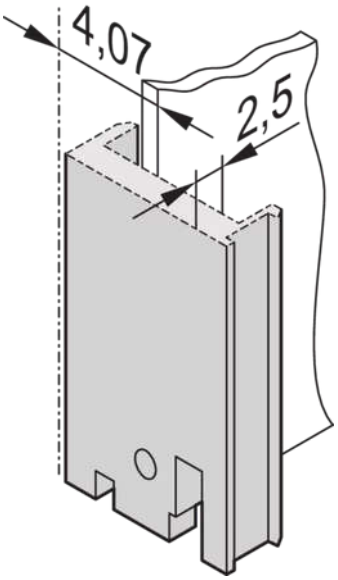
4,07
2,5

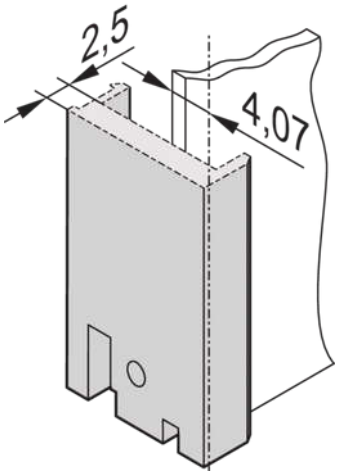
2,5
4,07

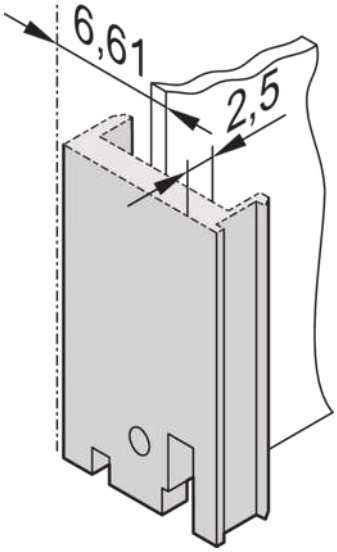
6,61
2,5

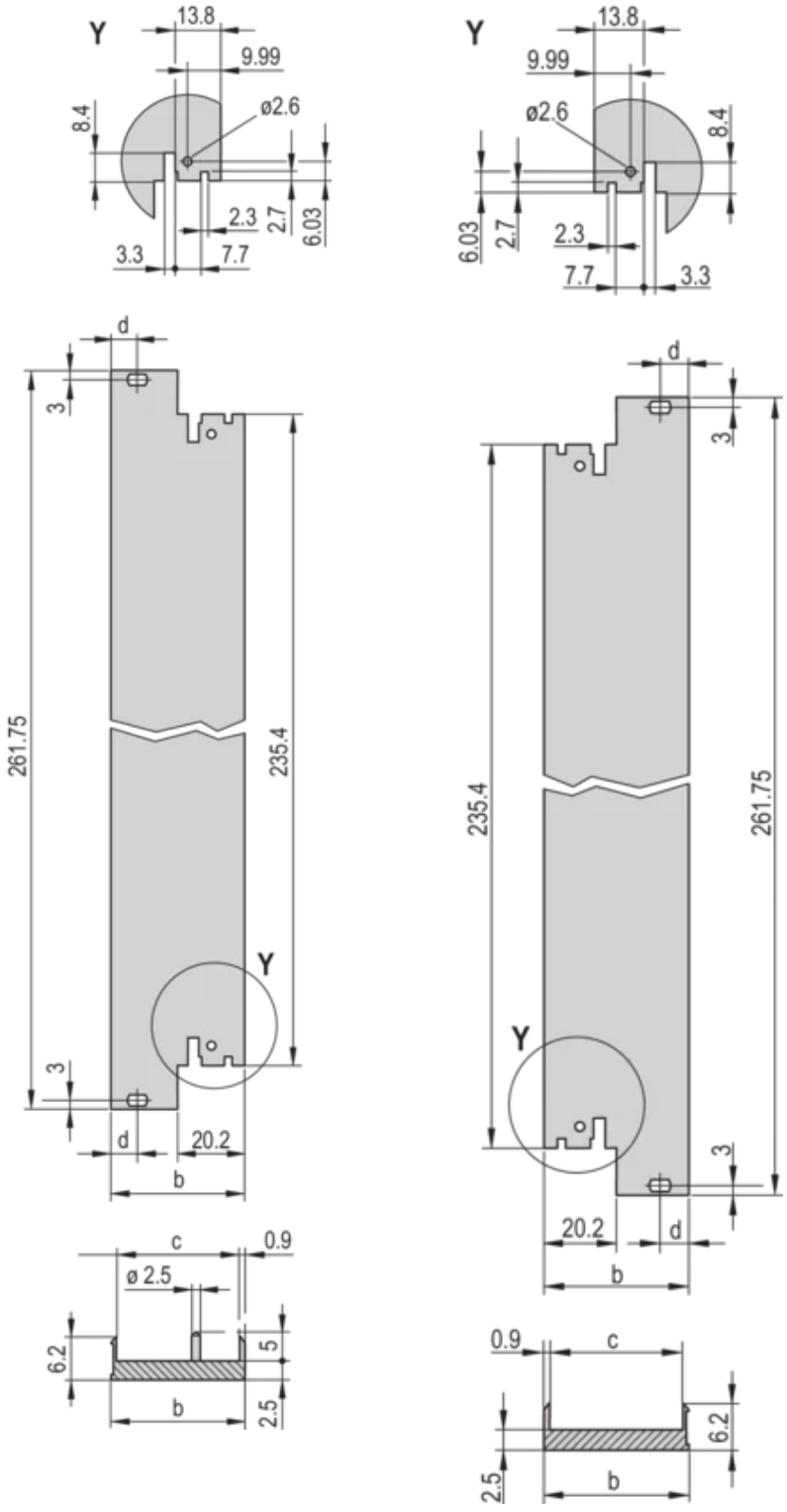

KEY FEATURES

Front panel, 6 U

Al extrusion, 2.5-mm, front-anodized,-rear conductive

U-profile, shieldable with textile EMC gasket

For IEL/IET/Trapeziform Type 2 handle

Manufacturing process causes various surface structures to appear between 4 to 12 HP and 14 to 16 HP

For front mounting, PCB fixing with 0.1" offset

For Rear I/O mounting

PRODUCT ATTRIBUTES

Type: Front Panel for Handle (PIU)

Accessory Type: Front panel

Handle Type: IEL; IET; Trapezoid, Type 2

Mounting: Screw-on Front; Screw-on Rear IO

EMC Shielding: No (Retrofittable)

EMC Gasket Type: Textile

Material: Aluminum

Front Finish: Anodized

Rear Finish: Conductive

Treated Edges: No

Rack Height: 6 U

Rack Width: 6 HP

Height: 261.8 mm

Width: 30.1 mm

Depth: 2.5 mm

Complies With: IEC 60297-3-102; IEEE 1101.10; IEC 60297-3-103; IEEE 1101.1/11

Package Quantity: 5

ADDITIONAL PRODUCT DETAILS

U-Profile front panel can be shielded with a textile gasket. It can be combined with the IEL and IET or the type 2 handle in trapezoid form.

Please order EMC profile seal separately.

Please take into consideration that deliveries may be carried out in the stated SPQs (SPQ, e.g. 5 pieces, 10 pieces, 50 pieces, etc.). Differing order quantities (e.g. 2 pieces) may be changed to the next possible delivery quantity = Standard Pack Quantity.

CERTIFICATIONS

RoHS COMPLIANT

North America
All locations
+1.763.422.2661
Chat with us:
schroff.nvent.com

Europe
Straubenhardt, Germany
+49.7082.794.0
Betschdorf, France
+33.3.88.90.64.90
Warsaw, Poland
+48.22.209.98.35
Assago, Italy
+39.02.932.7141
Chat with us:
schroff.nvent.com

Asia
Shanghai, China
+86.21.2412.6943
Qingdao, China
+86.532.8771.6101
Singapore
+65.6768.5800
Shin-Yokohama, Japan
+81.45.476.0271
Chat with us:
schroff.nvent.com

Middle East & India
Dubai, United Arab Emirates
+971.4.378.1700
Bangalore, India
+91.80.6715.2001
Istanbul, Turkey
+90.216.250.7374
Chat with us:
schroff.nvent.com

nVent

Our powerful portfolio of brands:
nVent.com **CADDY ERICO HOFFMAN RAYCHEM SCHROFF TRACER**

© 2023 nVent. All nVent marks and logos are owned or licensed by nVent Services GmbH or its affiliates. All other trademarks are the property of their respective owners.

nVent reserves the right to change specifications without notice.