THE INFORMATION CONTAINED IN THIS DRAWING IS THE SOLE PROPERTY OF L-COM, INC. ANY REPRODUCTION IN PART OR WHOLE WITHOUT THE WRITTEN PERMISSION OF L-COM, INC. IS PROHIBITED.

REVISIONS			
REV	DESCRIPTION	DATE	APPROVED
A	INITIAL RELEASE	8/19/10	D.GRIFFIN
B	ECN 5463: ADDED PANEL CUTOUT	4/26/11	D. CASTRO

WIRING TABLE	
DB15 M	TERMINAL BLOCK #
1	1
2	2
3	3
4	4
5	5
6	6
7	7
8	8
9	9
10	10
11	11
12	12
13	13
14	14
15	15
GROUND	G

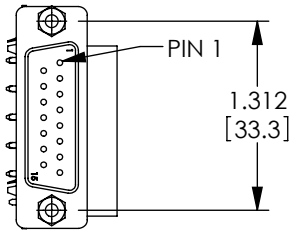

DB15 MALE
D-SUB
CONNECTOR

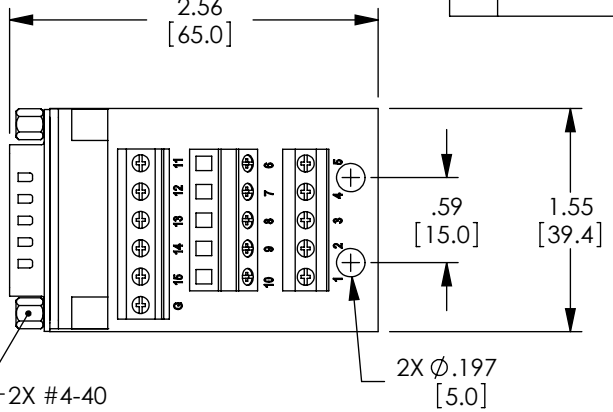

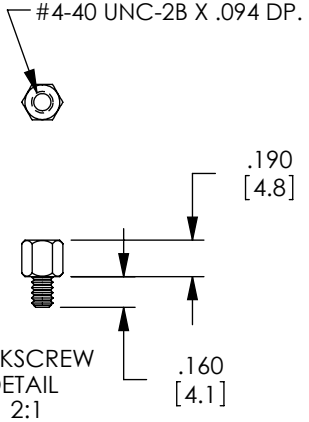

JACKSCREW
DETAIL
2:1

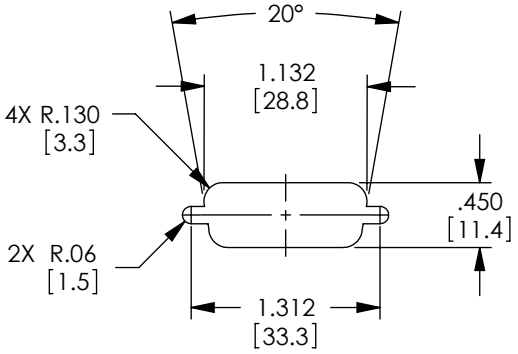

RECOMMENDED PANEL OPENING
(MAX PANEL THICKNESS: 0.06")
B

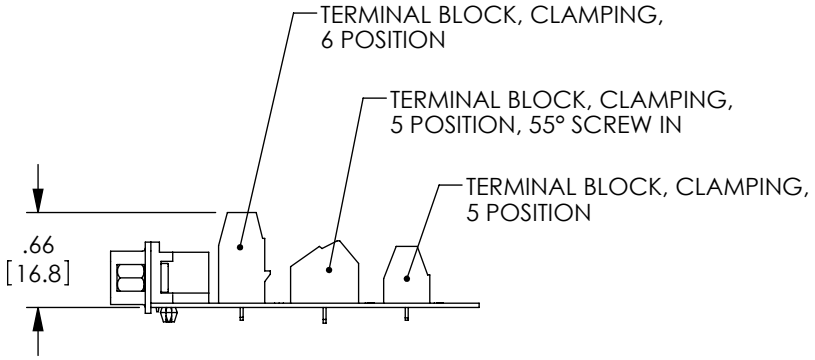

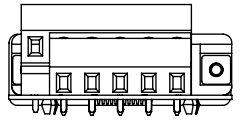

RoHS Compliant ✔

NOTES:

1. VOLTAGE RATING: 1000V AC & 500V DC.
2. COMPONENT SHALL BE TESTED FOR CONTINUITY.
3. COMPONENT SHALL BE INDIVIDUALLY PACKAGED IN ACCORDANCE WITH L-COM SPEC. PS-0031.

UNLESS OTHERWISE SPECIFIED,
DIMENSIONS ARE IN INCHES [mm]
OVERALL CABLE LENGTH TOLERANCE:
≤12 [305] = +1 [25] / -0
>12 [305] ≤60 [1524] = +2 [51] / -0
>60 [1524] ≤120 [3048] = +4 [102] / -0
>120 [3048] ≤300 [7620] = +6 [152] / -0
>300 [7620] = +5% / -0%
ALL OTHER DIMENSIONAL TOLERANCES:
.X = ± .2
.XX = ± .02
.XXX = ±.005
PROJECTION

APPROVALS	DATE
DRAWN BY D. CASTRO	8/18/10
CHECKED BY D. PARHAM	8/18/10
APPROVED BY S. SMITH	8/18/10

CONFIGURATION DETAILS OF UNDIMENSIONED FEATURES MAY VARY

COLOR VARIATIONS MAY OCCUR

L-COM Global Connectivity
45 BEECHWOOD DRIVE
NORTH ANDOVER, MA
01845

CATEGORY
DATA

PRODUCT DESCRIPTION
CONN, DB15M FIELD TERMINATION

SIZE	FSCM NO.	DWG. NO.	REV.
A	43321	DGB15MT1	B

SCALE: NONE | CAD FILE: DGB15MT1.SLDDRW | SHEET 1 OF 1