UGT529

Ultrasonic sensor

UGB01200GOKG/IO-Link/US

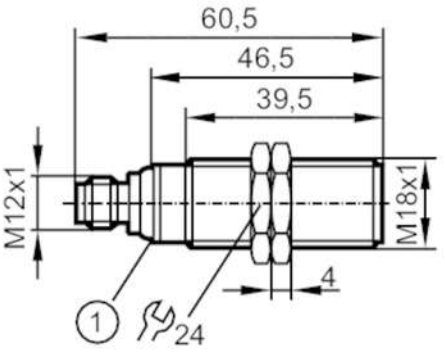

1 LEDs

Product characteristics		
Electrical design		PNP
Output function		normally open / normally closed; (parameterisable)
Sensing range	[mm]	80...1200; (Target: 200 x 200 mm)
Communication interface		IO-Link
Housing		threaded type
Dimensions	[mm]	M18 x 1 / L = 60.5
Electrical data		
Operating voltage	[V]	10...30 DC; ("supply class 2" to cULus)
Current consumption	[mA]	< 35
Protection class		III
Reverse polarity protection		yes
Power-on delay time	[s]	< 0.3
Converter frequency	[kHz]	200
Inputs / outputs		
Number of inputs and outputs		Number of digital outputs: 2
Outputs		
Total number of outputs		2
Electrical design		PNP
Number of digital outputs		2
Output function		normally open / normally closed; (parameterisable)
Max. voltage drop switching output DC	[V]	2.2
Permanent current rating of switching output DC	[mA]	100
Switching frequency DC	[Hz]	5
Short-circuit protection		yes
Overload protection		yes
Detection zone		
Sensing range	[mm]	80...1200; (Target: 200 x 200 mm)
Blind zone	[mm]	80

UGT529

Ultrasonic sensor

UGB01200GOKG/IO-Link/US

Angle of aperture cylindrical	[°]	14; (±2)
Max. deviation from the 90° angle sensor/object	[°]	± 4

Accuracy / deviations		
Temperature compensation		yes
Hysteresis	[%]	< 1
Switch point drift	[%]	-2.5...2.5
Repeatability IO-Link	[%]	< 0,7
Repeatability		1 %
Resolution	[mm]	1
Notes on the accuracy / deviation		The indicated values are reached after a warm-up time of min. 20 minutes

Software / programming		
Parameter setting options		hysteresis / window; second switch point; Switch-on and switch-off delay; switch-on operations; Teach function; light-on/dark-on mode

Interfaces			
Communication interface		IO-Link	
Transmission type		COM2 (38,4 kBaud)	
IO-Link revision		1.1	
SDCI standard		IEC 61131-9	
Profiles		Smart Sensor: Device Identification; Multi-channel, two setpoint switching sensor, type 0 Generic Profiled Sensor; Process Data Variable; Device Diagnosis; Teach Channel	
SIO mode		yes	
Required master port type		A	
Min. process cycle time	[ms]	16	
IO-Link process data (cyclical)		**function**	**bit length**
		process value	16
		device status	4
		binary switching information	2
IO-Link functions (acyclical)		application specific tag; operating hours counter	
Supported DeviceIDs		**Type of operation**	**DeviceID**
		default	891
Note		For further information please see the IODD PDF file under "Downloads"	

Operating conditions		
Ambient temperature	[°C]	-20...70
Storage temperature	[°C]	-30...80
Protection		IP 67

Tests / approvals			
EMC		EN 61000-4-2 ESD	4 kV CD / 8 kV AD
		EN 61000-4-3 HF radiated	3 V/m
		EN 61000-4-4 Burst	2 kV
		EN 61000-4-6 HF conducted	3 V
		EN 55011	Class A
Vibration resistance		EN 60068-2-6 Fc	(10-55) Hz 1 mm amplitude, oscillation period 5 min., 30 min. per axis at resonance or 55 Hz

UGT529

Ultrasonic sensor

UGB01200GOKG/IO-Link/US

Shock resistance		EN 60068-2-27 Ea	30 g 11 ms half-sine; 3 shocks each in every direction of the 3 coordinate axes
MTTF	[years]	210	
UL approval		Ta	-20...70 °C
		power supply	Class 2
		File number UL	E174191

Mechanical data

Weight	[g]	80	
Housing		threaded type	
Dimensions	[mm]	M18 x 1 / L = 60.5	
Thread designation		M18 x 1	
Materials		stainless steel (316L/1.4404); PA; epoxy glass ceramics	
Tightening torque	[Nm]	50	

Displays / operating elements

Display		switching status	2 x LED, yellow
		echo	1 x LED, green

Accessories

Items supplied		lock nuts: 2, stainless steel	

Remarks

Remarks		operating voltage "supply class 2" according to cULus	
Pack quantity		1 pcs.	

Electrical connection

Connector: 1 x M12; coding: A

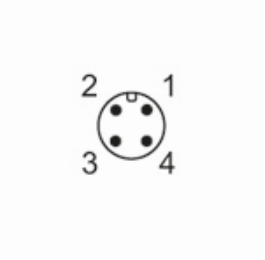

UGT529

Ultrasonic sensor

UGB01200GOKG/IO-Link/US

Connection

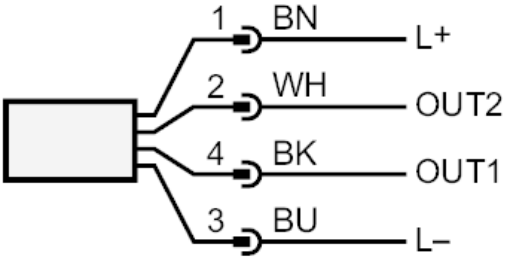

OUT 1:	switching output / IO-Link
OUT 2:	switching output
	colours to DIN EN 60947-5-2
BK =	black
BN =	brown
BU =	blue
WH =	white

UGT529

Ultrasonic sensor

UGB01200GOKG/IO-Link/US

Diagrams and graphs

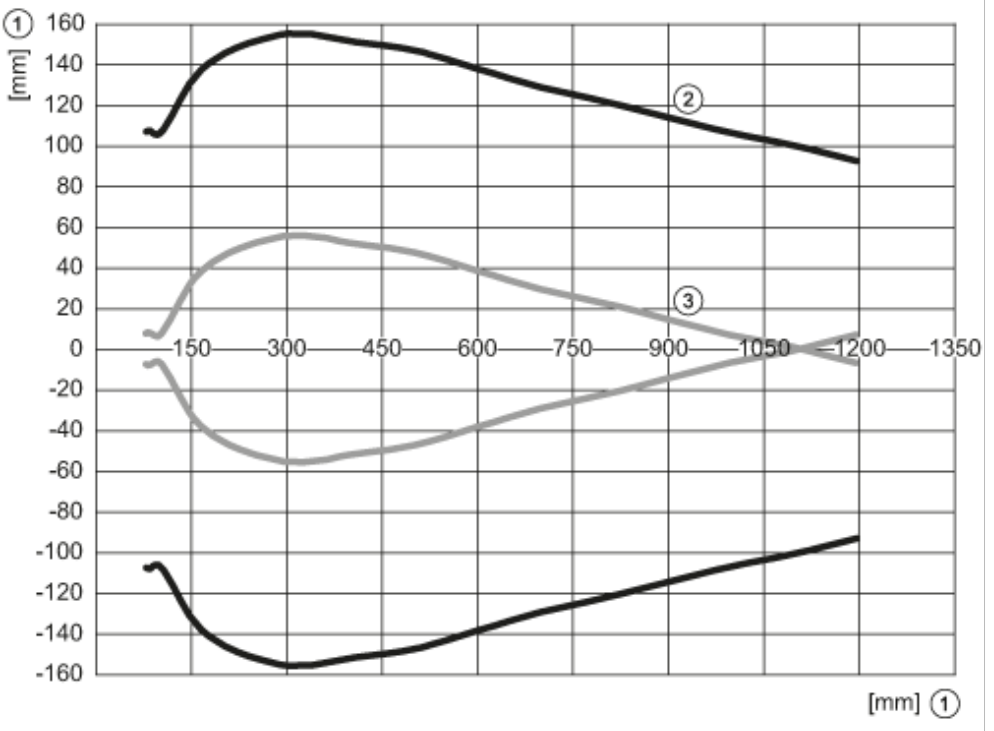

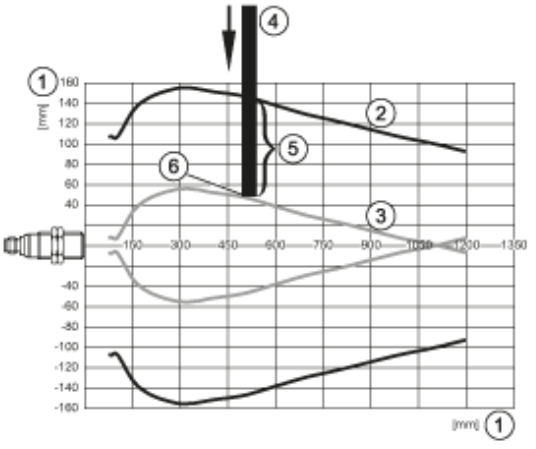

1: distance

2: Detection zone

3: switch-on/switch-off graph

4: Target 200 x 200 mm

5: 50% of the target in the detection zone

6: switch point