SDS Series
Side Actuated Detect Switch



Description

SDS series are side actuated detect switches, manufactured to have a low actuation force (75g maximum) and a low-profile package that sits just 2mm from the PCB. Perfect for consumer electronics, medical devices and ATCA or MicroTCA devices, the long-lasting SDS series also have a 2mm overtravel, making them ideal for detector applications.

Features & Benefits

- Low profile package sits just 2mm off PCB
- 2mm overtravel ideal for detector applications
- Low actuation force (75 grams max.)
- Pick & place compatible, available in tape & reel packaging
- Ultra low current capabilities
- RoHS compliant and compatible

Applications

- Medical devices
- Consumer electronics
- PCB lock cam detect
- IoT devices
- ATCA and MicroTCA

Specifications

Contact Rating	100 mA @ 12 VDC For ULC version, min. current is 10µA @ 1.8 VDC
Mechanical & Electrical Life	50,000 Cycles
Contact Resistance	100 m Ω max. initial
Insulation Resistance	10 M Ω min. @ 100 VDC
Operating Temperature	-40˚C to 85˚C
Solderability	IR compatible, no wash, 260˚C max.
Packaging	Bulk or tape & reel (3000 per reel)

Materials

Base	Glass filled LCP (UL 94V-0)
Actuator	
Cover	Nickel silver w/ silver plate
Movable Contact	Phosphor bronze, see table for plating
Terminals	

Ordering Number

Our easy build-a-switch concept allows you to mix and match options to create the switch you need. To order, select desired option from each category and place it in the appropriate box.

SDS - 00 - x - x - xxx

1. Normally open silver plating
2. Normally close silver plating
4. Normally open gold plating
5. Normally close gold plating

Low Current Capability
None: Under standard specification
ULC: Low current

Packaging
None: Bulk
R: Tape & Reel

© 2024 Littelfuse, Inc.
Specifications are subject to change without notice.
Revised: CM.06/06/24

SDS Series
Side Actuated Detect Switch

Part #	Housing Color	Packaging	Schematic	Contact Plating	Terminal Plating
SDS001	Black	Bulk	N.O.	Silver Clad	Silver Plate
SDS001R		Tape & Reel			
SDS001RULC		Tape & Reel			
SDS002	White	Bulk	N.C.		
SDS002R		Tape & Reel			
SDS002RULC		Tape & Reel			
SDS004	Black	Bulk	N.O.	Gold Flash	
SDS004R		Tape & Reel			
SDS004RULC		Tape & Reel			
SDS005	White	Bulk	N.C.		
SDS005R		Tape & Reel			
SDS005RULC		Tape & Reel			

Dimensions inches (mm)

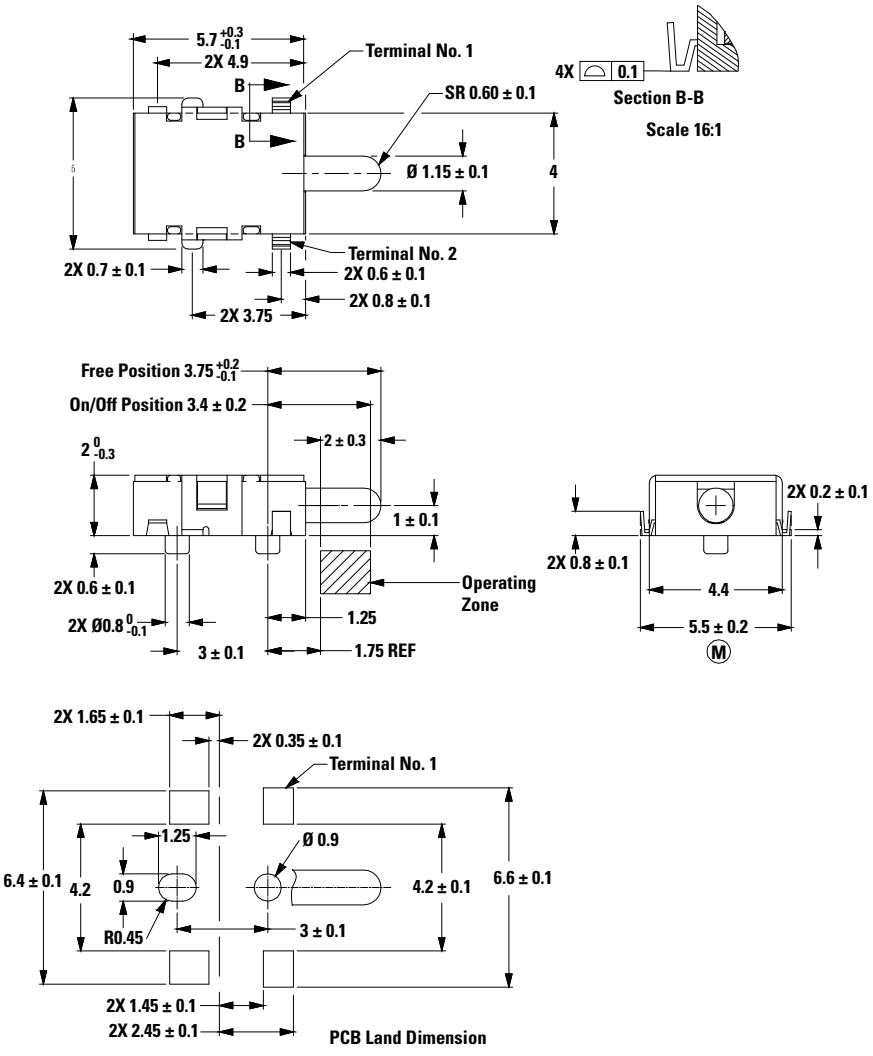

© 2024 Littelfuse, Inc.
Specifications are subject to change without notice.
Revised: CM.06/06/24

SDS Series
Side Actuated Detect Switch

Tape and Reel Specifications

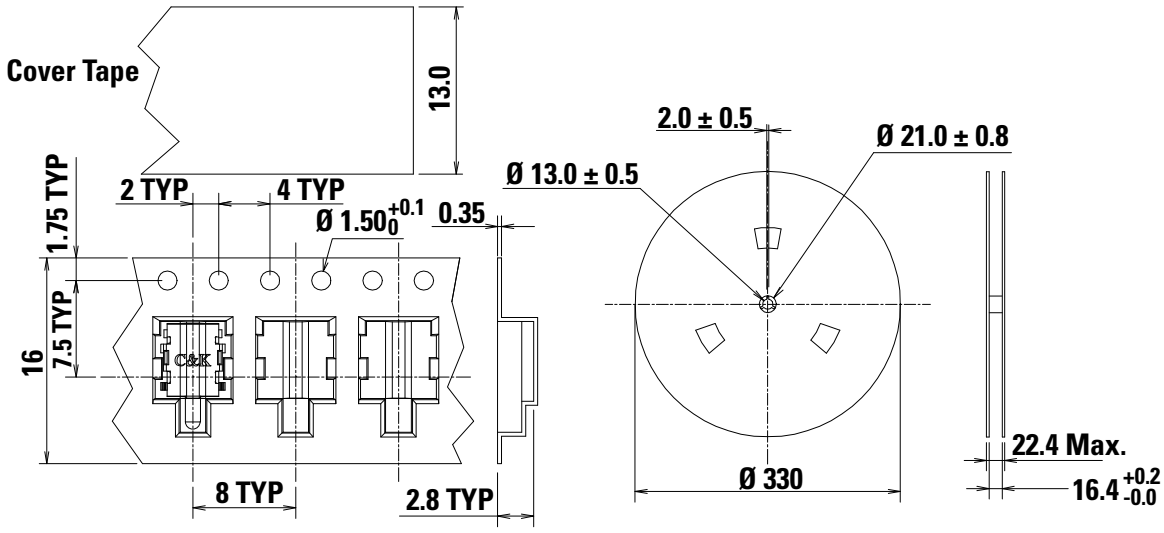

Tape & Reel Packaging Notes:

- Package Quantity: 3,000 pcs/reel
- Specification of taping package: The reel carrier tape will have a lead of 33 empty component pockets and an end of 14 empty component pockets on every reel. All empty component pockets will be sealed with cover tape.
- After the lead, no reel carrier tape shall have two consecutive empty component pockets.

Disclaimer Notice - Information furnished is believed to be accurate and reliable. However, users should independently evaluate the suitability of and test each product selected for their own applications. Littelfuse products are not designed for, and may not be used in, all applications. Read complete Disclaimer Notice at http://www.littelfuse.com/disclaimer-electronics.

© 2024 Littelfuse, Inc.
Specifications are subject to change without notice.
Revised: CM.06/06/24