Datasheet

ENGLISH



FSST Tachometer Relays

The Tempatron FSST tachometer relays are designed to monitor and control speed by energising the relay output when the monitored speed exceeds the setting on the user adjustable front dial. The speed setting is adjustable from 200rpm to 10,000rpm and the relay has an internal 24Vdc power supply for powering active sensors, plus a 0-100µA meter output, with calibration adjustment, for displaying the speed.

The tachometer relays are housed in a compact DIN48 square enclosure which can either panel mount or surface/DIN rail mount to a socket and they are auxiliary powered from either 110 or 230Vac. The 5 Amp rated single pole changeover relay output contact is isolated from the supply voltage and the relays have two LEDs to indicate both power and relay status.

Models Available

FSST 200rpm to 10,000rpm Tacho Relay

Product Features

- 200rpm to 10,000rpm tachometer relay
- NPN sensor or voltage free input
- Supply voltage 110Vac or 230Vac
- 0-100µA output for rpm meter
- Internal 24Vdc supply for sensor
- Standard DIN48 square size
- Plug-in socket or panel mounting
- Matching timers available
- Matching temp. controllers available
- Plug-in sockets also available

Dimensions

All dimensions in mm

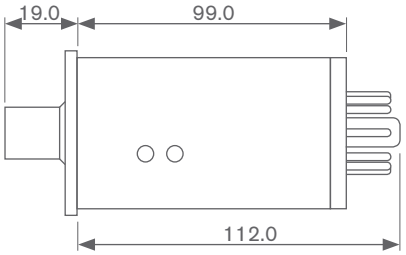

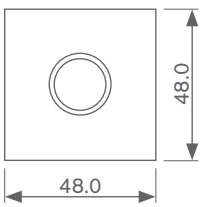

Panel cutout 45mm square (-0.0/+0.5)

Connections

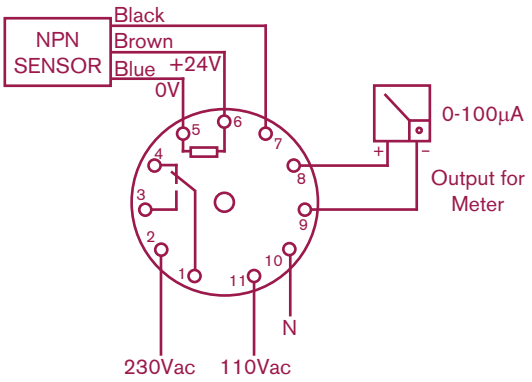

Note:
A switch input (relay contact, reed switch or open collector transistor etc.) may be used across terminals 5 and 7 as an alternative input to the unit instead of the NPN proximity sensor. When using a switch input, a resistor (approximate value 4.7k ohm) must be connected between terminals 5 and 6.

RS, Professionally Approved Products, gives you professional quality parts across all products categories. Our range has been testified by engineers as giving comparable quality to that of the leading brands without paying a premium price.

Specification

Repeat Accuracy:

- ±5% of full scale

Power Supply Voltage:

- 110Vac and 230Vac (±10%)

Burden:

- <4VA

Frequency:

- 50/60Hz

Input Sensor:

- Voltage free contact (no bounce)
- Open collector transistor or Inductive switch

Input Impedance:

- 15kohm

Meter Output:

- 0-100μA

Meter Calibration:

- Adjustable preset potentiometer accessible via the side of unit

Relay Output:

- Single pole changeover contact

Contact Rating:

- 5A at 240Vac/30Vdc (resistive)

Electrical Contact Life:

- 100,000 operations at 5A

Operating Temperature:

- -10°C to 50°C

Enclosure Code:

- Case IP40

Weight:

- 210g

Markings:

- CE marked (meets EN61010-1 low voltage and EN50081-1/50082-1 EMC directives)

Specification subject to change without notice.