DV1520

5-segment light tower

LED-Tower-5/Standard

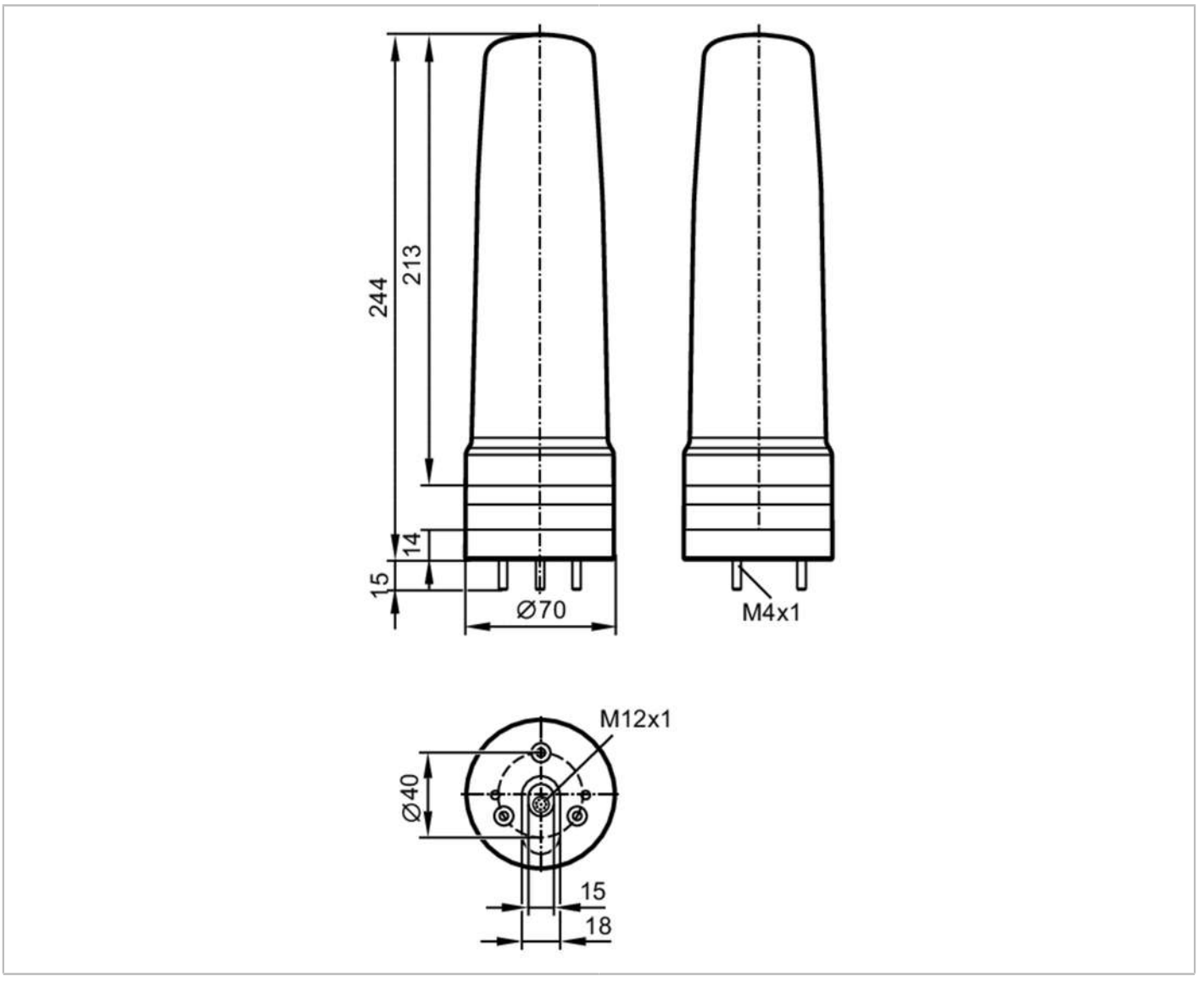

Application		
Application		signalling machine conditions
Electrical data		
Operating voltage	[V]	18...30 DC; (to SELV/PELV)
Nominal voltage DC	[V]	24
Current consumption	[mA]	< 200
Inputs / outputs		
Number of inputs and outputs		Number of digital inputs: 6
Inputs		
Number of digital inputs		6
Input current High	[mA]	6
Interfaces		
Communication interface		IO-Link

DV1520

5-segment light tower

LED-Tower-5/Standard

Transmission type		COM2 (38,4 kBaud)	
IO-Link revision		1.1	
SDCI standard		IEC 61131-9	
SIO mode		yes	
Required master port type		A	
Min. process cycle time	[ms]	3.2	
Supported DeviceIDs		**Type of operation**	**DeviceID**
		default	850

Operating conditions		
Ambient temperature	[°C]	-25...50
Storage temperature	[°C]	-40...75
Max. relative air humidity	[%]	90
Air pressure	[kPa]	< 106
Max. height above sea level	[m]	2000
Protection		IP 65

Mechanical data		
Weight	[g]	519
Dimensions	[mm]	Ø 70 / L = 244
Materials		housing: ABS; lens: PC

Displays / operating elements		
Display	status	1 x LED, green
	LED segment	5 x 4 LED

Accessories	
Accessories (optional)	mounting base, E89060
	wall bracket, E89061
	Mounting adapter, E89063
	bracket with lateral cable entry, E89064
	mounting tube, E89065
	mounting tube, E89066
	mounting tube, E89067

Remarks	
Remarks	For further information please see the operating instructions.
Pack quantity	1 pcs.

Electrical connection - plug

Connector: M12; coding: A



DV1520

5-segment light tower

LED-Tower-5/Standard

Connection	
1	digital input LED segment 5
2	not used
3	digital input LED segment 3
4	digital input LED segment 2
5	power supply
6	digital input LED segment 1
7	digital input LED segment 4
8	IO-Link (C/Q)

Diagrams and graphs

base mounting

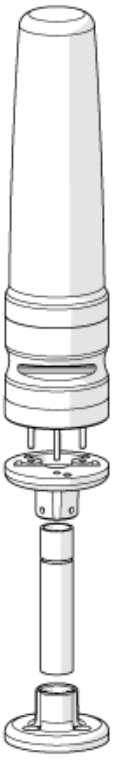

DV1520

5-segment light tower

LED-Tower-5/Standard

wall mounting

