THERMASREG® RTR - B

Room temperature controllers, mechanical, on-wall

S+S REGELTECHNIK

One-step mechanical single room controller **THERM**ASREG® **RTR - B** in bi-metal technology with thermal feedback for monitoring or controlling temperatures in dry rooms, or for activating any kind of heating system as room thermostat. For currentless open radiator valves, the cooling output from the changeover contact (normally open contact) must be connected. At breaker contacts, a maximum of 10 valve actuators can be connected and at normally open contacts a maximum of 5 valve actuators.

TECHNICAL DATA

Switching capacity: (Contact load)	230 V AC, 50 - 60 Hz heating: 10 mA...10 (4) A, DC 30 W cooling: 10 mA...5 (2) A
Sensor element:	bi-metal
Control range:	+5...+30 °C
Output:	breaker or changeover contact
Operating difference:	approx. 0.5 K
Housing:	plastic, material ABS, colour pure white (similar to RAL 9010)
Dimensions:	75 x 75 x 25 mm (E1)
Electrical connection:	0.14 - 2.5 mm^2 via terminal screws
Installation:	wall mounting or on in-wall flush box Ø 55 mm, base with 4-hole for mounting on vertically or horizontally installed in-wall flush boxes for cable entry from the back, with predetermined breaking point for on-wall cable entry from top / bottom in case of plain on-wall installation
Protection class:	II (according to EN 60 730)
Protection type:	**IP 30** (according to EN 60 529)
Standards:	CE conformity, EMC directive 2014 / 30 / EU, low-voltage directive 2014 / 35 / EU

Connecting diagram **RTR - B 121**

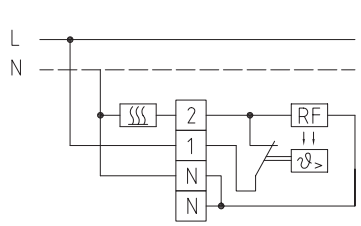

Connecting diagram **RTR - B 721**

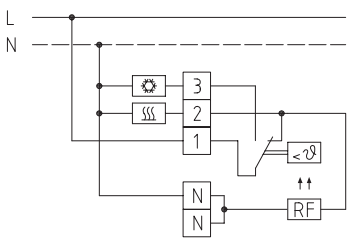

Connecting diagram **RTR - B 124**

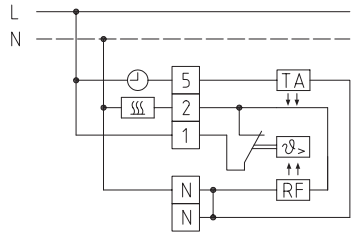

Connecting diagram **RTR - B 747**

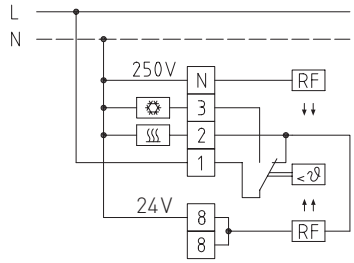

Dimensional drawing

Housing **E 1**
(Picture similar)

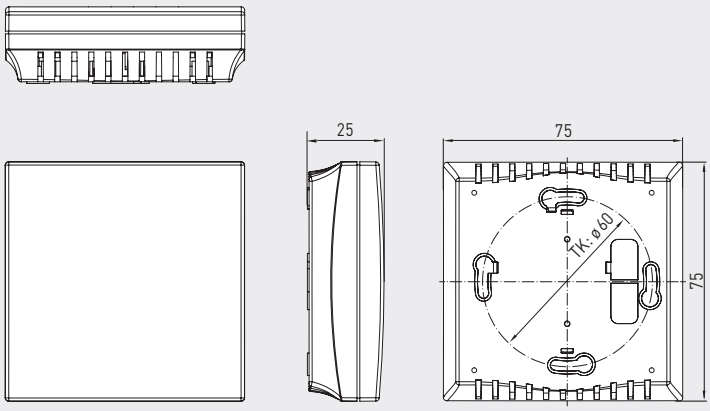

RTR-B 747
with internal setting



Dimensional drawing

Housing **E 1**
with one potentiometer
(Picture similar)

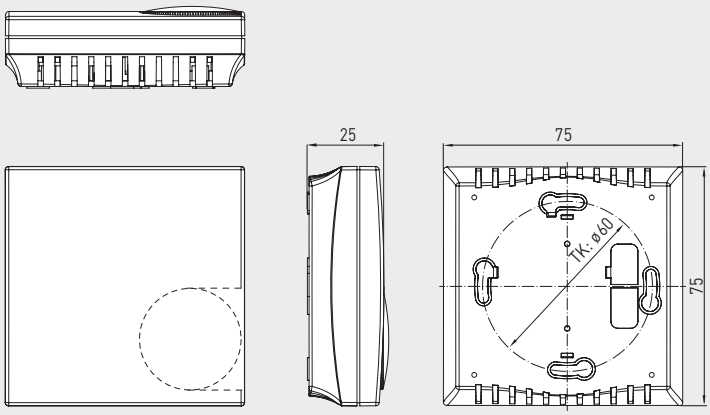

RTR-B 121
RTR-B 124
RTR-B 721
with external setting



THERMASREG® RTR - B Room temperature controllers

Type / WG01	Temperature Range	Function	Output	Item No.	Price
RTR-B 121 / B 124 / B 721				**External setting**	
RTR-B 121	+5...+30 °C	Heating	Breaker	1102-4011-2100-000	**38,92 €**
RTR-B 124	+5...+30 °C	Heating, temperature reduction - 5 K	Breaker	1102-4011-2400-000	**41,14 €**
RTR-B 721	+5...+30 °C	Heating, cooling	Changeover contact	1102-4017-2100-000	**42,84 €**
RTR-B 747				**Internal setting**	
RTR-B 747	+5...+30 °C	Heating, cooling	Changeover contact	1102-4017-4700-000	**46,73 €**