E20851

Reflector for retro-reflective sensors

REFLECTOR TS40-01

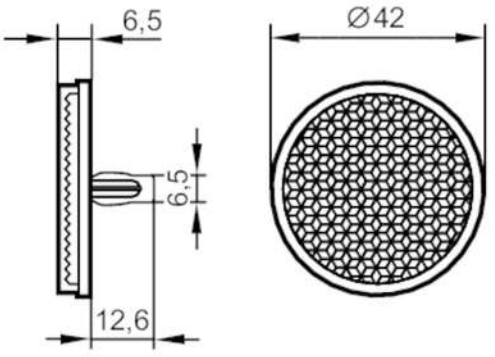

Application		
Design		round, for red light and infrared light retro-reflective sensors
Installation		push-fit fastener
Operating conditions		
Ambient temperature	[°C]	-10...60
Mechanical data		
Weight	[g]	7.8
Dimensions	[mm]	Ø 42 / L = 6.5
Reflector surface	[mm]	Ø 40
Materials		plastics
Remarks		
Pack quantity		1 pcs.