Voltage Transducer LV 25-800

U_{PN} = 800 V

For the electronic measurement of voltages: DC, AC, pulsed..., with galvanic separation between the primary circuit and the secondary circuit.

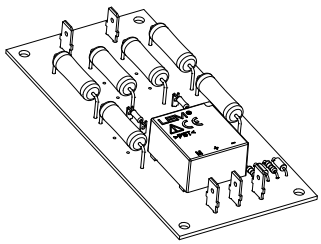

Electrical data

U_{PN}	Primary nominal RMS voltage		800		V
U_{PM}	Primary voltage, measuring range		0 ... ±1200		V
I_{PN}	Primary nominal RMS current		10		mA
R_M	Measuring resistance		$R_{M\,min}$	$R_{M\,max}$	
	with ±12 V	@ ±800 V $_{max}$	30	200	Ω
		@ ±1200 V $_{max}$	30	100	Ω
	with ±15 V	@ ±800 V $_{max}$	100	320	Ω
		@ ±1200 V $_{max}$	100	180	Ω
I_{SN}	Secondary nominal RMS current		25		mA
N_P/N_S	Turns ratio		800 V : 25 mA		
U_C	Supply voltage (±5 %)		±12 ... 15		V
I_C	Current consumption		10 (@ ±15 V) + I_S		mA

Accuracy - Dynamic performance data

ε_{tot}	Total error @ U_{PN}, T_A = 25 °C		±0.8		%
ε_L	Linearity error		< 0.2		%
			Typ	Max	
I_O	Offset current @ U_P = 0, T_A = 25 °C			±0.15	mA
I_{OT}	Temperature variation of I_O	−25 °C ... +25 °C	±0.10	±0.60	mA
		+25 °C ... +70 °C	±0.10	±0.35	mA
$t_{D\,90}$	Delay time to 90 % of U_{PN}		< 25		us

General data

T_A	Ambient operating temperature	−25 ... +70	°C
$T_{A\,st}$	Ambient storage temperature	−40 ... +85	°C
N_P/N_S	Turns ratio	2500 : 1000	
P_P	Total primary power loss	8	W
R_P	Resistance of primary @ T_A = 25 °C	80	kΩ
R_S	Resistance of secondary winding @ T_A = 70 °C	110	Ω
m	Mass	60	g
	Standards	EN 50178: 1997 UL 508: 2010	

Features

- Closed loop (compensated) voltage transducer using the Hall effect
- Insulating plastic case recognized according to UL 94-V0
- Primary resistor and transducer mounted on printed circuit board 128 × 60 mm.

Advantages

- Excellent accuracy
- Very good linearity
- Low temperature drift
- High immunity to external interference.

Applications

- AC variable speed drives and servo motor drives
- Static converters for DC motor drives
- Uninterruptible Power Supplies (UPS)
- Power supplies for welding applications.

Application Domain

- Industrial.

LEM reserves the right to carry out modifications on its transducers, in order to improve them, without prior notice
LEM International SA
Chemin des Aulx 8
1228 PLAN-LES-OUATES Switzerland
www.lem.com

Voltage Transducer LV 25-800

Insulation coordination

U_d	RMS voltage for AC insulation test [1], 50 Hz, 1 min	4.1 Min	kV
d_{Cp}	Creepage distance	13.8	mm
d_{Cl}	Clearance	13.8	mm
CTI	Comparative tracking index (group IIIb)	< 175	

Note: [1] Between primary and secondary.

Applications examples

According to EN 50178 and IEC 61010-1 standards and following conditions:

- Over voltage category OV 3
- Pollution degree PD2
- Non-uniform field

	EN 50178	IEC 61010-1
d_{Cp}, d_{Cl}, U_{Ni}	Rated insulation voltage	Nominal voltage
Basic insulation	1500 V	NA
Reinforced insulation	600 V	600 V

Safety

This transducer must be used in limited-energy secondary circuits according to IEC 61010-1.



This transducer must be used in electric/electronic equipment with respect to applicable standards and safety requirements in accordance with the manufacturer's operating instructions.



Caution, risk of electrical shock

When operating the transducer, certain parts of the module can carry hazardous voltage (eg. primary busbar, power supply).Ignoring this warning can lead to injury and/or cause serious damage.
This transducer is a build-in device, whose conducting parts must be inaccessible after installation.A protective housing or additional shield could be used.
Main supply must be able to be disconnected.

LEM reserves the right to carry out modifications on its transducers, in order to improve them, without prior notice

LEM International SA
Chemin des Aulx 8
1228 PLAN-LES-OUATES Switzerland
www.lem.com

Dimensions LV 25-800 (in mm)

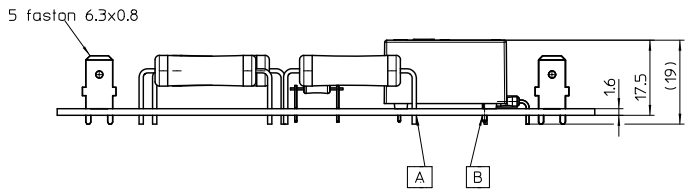

Rep.	d_{Cl}	d_{Cp}
A-B	13.8 mm	13.8 mm

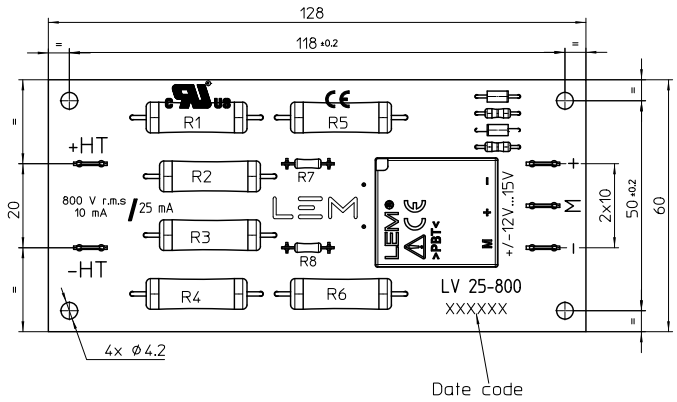

Connection

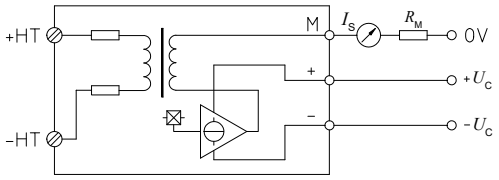

Mechanical characteristics

• General tolerance	±0.3 mm
• Transducer fastening	4 holes ⌀ 4.2 mm the mounting must be done on a adapted holder with four M4 screws
• Connection of primary	Faston 6.3 × 0.8 mm
• Connection of socondary	Faston 6.3 × 0.8 mm

Remarks

- I_S is positive when U_P is applied on terminal + HT.
- The primary circuit of the transducer must be linked to the connections where the voltage has to be measured.
- Installation of the transducer must be done unless otherwise specified on the datasheet, according to LEM Transducer Generic Mounting Rules. Please refer to LEM document N°ANE120504 available on our Web site: **https://www.lem.com/en/file/3137/download/.**
- This is a standard model. For different versions (supply voltages, turns ratios, unidirectional measurements...), please contact us.

LEM reserves the right to carry out modifications on its transducers, in order to improve them, without prior notice

LEM International SA
Chemin des Aulx 8
1228 PLAN-LES-OUATES Switzerland
www.lem.com