Hour meters / timers, electromechanical

Dual function counters	Pulse + time / 2 x time (AC+DC)	HC77



The counter combinations HC77 and HC77.55 comprise an hour meter and a totalizer. They can be controlled both simultaneously and separately.

These panel mount counters have a reduced mounting depth. They can be used in many different fields of application.

Optionally with 2 hour meters on request.

Characteristics

- Hour meter and totalizer in one single device.
- Without reset.
- High shock resistance.
- Magnified large figures.
- Protection IP52 front side (optional IP65).
- Data retention in case of power failure.
- UL-approved.

Benefits

- Long service life.
- Optional: counters controlled separately.

Applications

General time measurement, maintenance intervals for measuring instruments (respiration units, oxygen, dialysis), small appliances, UV lamps, display panels in vehicles, lifts, heating burners.

Type series

Description	*Type*
Dual function counter 48 x 48 mm [1.89 x 1.89“]	**HC77**
With adapter front bezel 55 x 55 mm [2.17 x 2.17“]	**HC77.55**

Order information:

Art. no. (for special voltages etc. indicate exact model, voltage and frequency e.g. HC77, 120 V AC, 60 Hz)

Options

- Housing color: grey — Art. no. 3.55X.400.XXX
- Flat pin 0.8 x 6.3 mm [0.031 x 0.25“] — Art.-No.: 3.55X.40X.XXX.011
- Separate connections for running time meter and adding counter.
  This model is available for AC or DC (not mixed)
  Adding counter max. 10 Hz
  Electrical connection:
  2 x cable 2 x 0.5 mm² [AWG20], NYFAZ, 0.5 m [1.64‘]
  (hour meter cable red/black, adding counter grey cable)
  Art. no. 3.55X.40X.XXX.060
- Sealed window (IP65 front side) with:
  - Screw terminal — Art. no. 3.55X.40X.XXX.419
  - Flat pin 0.8 x 6.3 mm [0.031 x 0.25“] — Art. no. 3.55X.40X.XXX.062
  - Separated connections (cable) — Art. no. 3.55X.40X.XXX.061
- Counter combination with 2 hour meters 10 ... 30 V DC
  - 2 x cable 2 x 0.5 mm² [AWG20] — Art. no. 3.554.401.351.060
  - Spring-type terminal — on request

© Fritz Kübler GmbH, subject to errors and changes. 03/2023

Dual function counters | Pulse + time / 2 x time (AC+DC) | HC77

Accessories / Mounting examples

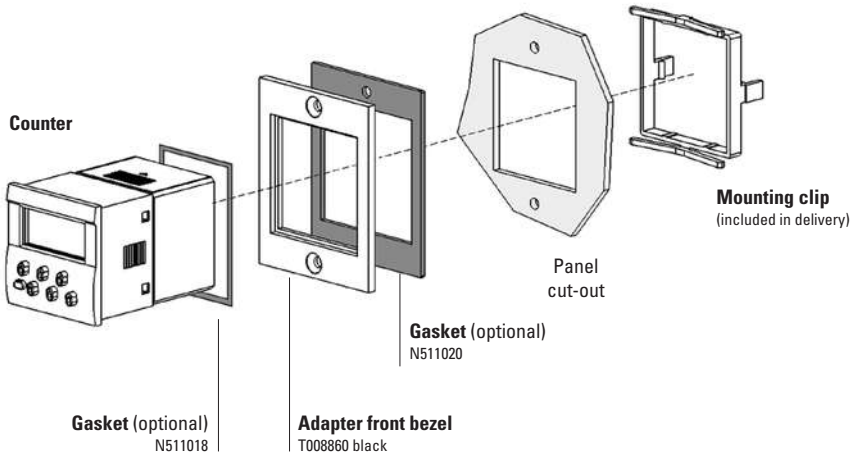

		Type / size	Description		Order no.	suitable gasket
Adapter front bezel		**55 x 55 mm [2.17 x 2.17]**	for cut-out 50 x 50 mm [1.97 x 1.97“] or ø 50,5 mm [1.99“] to cut-out 45 x 45 mm [1.77 x 1.77“]	grey black	**T008170** **T008171**	**N511017**
		**55 x 55 mm [2.17 x 2.17]**	for cut-out 50 x 50 mm [1.97 x 1.97“] to cut-out 45 x 45 mm [1.77 x 1.77“]	black	**T008853**	**N511004**
		**60 x 75 mm [2.36 x 2.95]**	for cut-out 50 x 50 mm [1.97 x 1.97“] to cut-out 45 x 45 mm [1.77 x 1.77“]	black	**T008860**	**N511020**
		**72 x 72 mm [2.83 x 2.83]**	for cut-out 68 x 68 mm [2.68 x 2.68“] to cut-out 45 x 45 mm [1.77 x 1.77“]	grey black Mating clip	**T008176** **T008177** **T009420**	**N511016**
		**ø 72 mm [2.83]**	for cut-out ø 60 mm [2.36“] to cut-out 45 x 45 mm [1.77 x 1.77“]	black	**N510226**	–
Gasket counter			48 x 48 mm (for installation in adapter front bezel)		**N511018**	

© Fritz Kübler GmbH, subject to errors and changes. 03/2023

Dual function counters | Pulse + time / 2 x time (AC+DC) | HC77

Technical data

Electrical characteristics

Electrical connection		screw terminal (tightening torque max. 0.8 Nm)
Power consumption	10 ... 30 V DC	approx. 1 W
	36 ... 80 V DC	approx. 1.65 W
	100 ... 130 V DC	approx. 1.75 W
	20 ... 30 V AC, 50 Hz	approx. 0.53 VA
	42 ... 48 V AC, 50 Hz	approx. 0.53 VA
	100 ... 130 V AC, 50 Hz	approx. 1.43 VA
	187 ... 264 V AC, 50 Hz	approx. 3.0 VA
Rated voltages		
	AC (50 or 60 Hz)	20 ... 30/42 ... 48/100 ... 130/187 ... 264 V
	DC	10 ... 30/36 ... 80/100 ... 130 V
On time		100 %
Count mode		adding
Accuracy	AC	supply frequency + 30 ms
	DC	< 0.003 % (at 24 h)
Reset		no reset
Device safety	designed to	EN 61010 part 1
	protection class	2
	application area	pollution level 2

General technical data

Operating indicator of the running time meter	AC	fast rotating wheel with red dashes: 99999.99 h
	DC	1/100 h display turns continuously by 1 digit in 36 s: 999999.99 h
Height of figures		4 x 1.7 mm [0.16 x 0.067"] optical
Color of figures	hour meter	hour: white on black decimal: red on black
	pulse counter	white on black
Operating temperature		-15 °C ... +50 °C [+5 °F ... +122 °F] (non-condensing)
Relative humidity at +30 °C [+86 °F]		≤ 80 % (non-condensing)
Altitude		up to 2000 m [6562']
Mounting position		any

Mechanical characteristics

Protection		IP52 (front side) when built in
Housing color		black (standard)
Weight	HC77	65 g [2.29 oz]
	plug in frame 55	8 g [0.28 oz]
	plug in frame 72	13 g [0.46 oz]

Approvals

UL compliant in accordance with	File no. E128604
CE compliant in accordance with	
EMC Directive	2014/30/EU
RoHS Directive	2011/65/EU
Low Voltage Directive	2014/35/EU
UKCA compliant in accordance with	
EMC Regulations	S.I. 2016/1091
RoHS Regulations	S.I. 2012/3032
Low Voltage Regulations	S.I. 2016/1101

Terminal assignment

Counter with separate connections (rear view)

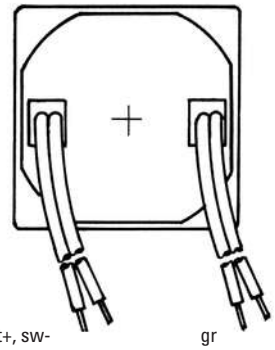

rt+, sw- hour meter

gr adding counter

© Fritz Kübler GmbH, subject to errors and changes. 03/2023

Dual function counters | Pulse + time / 2 x time (AC+DC) | HC77

Dual function counter 48 x 48 [1.89 x 1.89“]
Type HC77



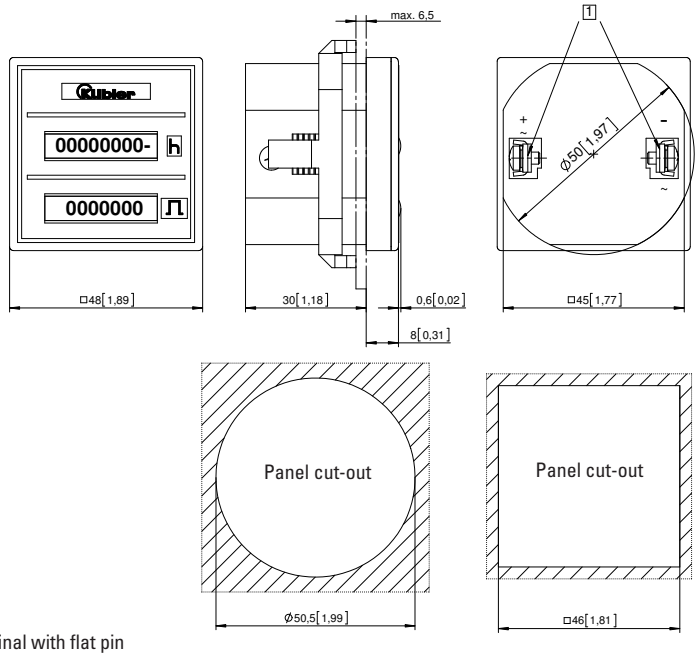

1 Screw terminal with flat pin 0.8 x 6.3 [0.031 x 0.25]

Type	Display	Voltage	Art. no. 10 ... 30 V	20 ... 30 V	36 ... 80 V	42 ... 48 V	100 ... 130 V	187 ... 264 V
HC77	7/8 digits	AC (50 Hz)		**3.550.401.071**		**3.550.401.072**	**3.550.401.074** [1]	**3.550.401.075** [1]
	7/8 digits	AC (60 Hz)		**3.550.401.081**		**3.550.401.082**	**3.550.401.084**	**3.550.401.085**
	7/8 digits	DC	**3.550.401.351** [1]		**3.550.401.353**		**3.550.401.381**	
Color of housing grey:			Art. no.	3.550.400.XXX				

Dual function counter 48 x 48 [1.89 x 1.89“] with adapter front bezel 55 x 55 [2.17 x 2.17“]
Type HC77.55



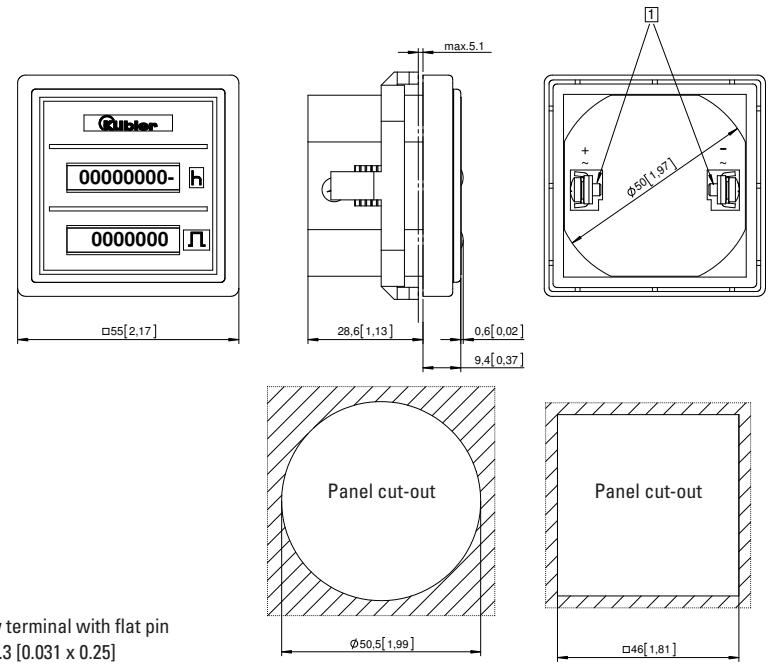

1 Screw terminal with flat pin 0.8 x 6.3 [0.031 x 0.25]

Type	Display	Voltage	Art. no. 10 ... 30 V	20 ... 30 V	36 ... 80 V	42 ... 48 V	100 ... 130 V	187 ... 264 V
HC77.55	7-/8 digits	AC (50 Hz)		**3.551.401.071**		**3.551.401.072**	**3.551.401.074**	**3.551.401.075**
	7/8 digits	AC(60 Hz)		**3.551.401.081**		**3.551.401.082**	**3.551.401.084**	**3.551.401.085**
	7/8 digits	DC	**3.551.401.351**		**on request**		**3.551.401.381**	
Color of housing grey:			Art. no.	3.551.400.XXX				

Dimensions in mm [inch]

1) Stock types

© Fritz Kübler GmbH, subject to errors and changes. 03/2023