REF. 509

BRASS BALL VALVE ACS PN40 REFERENCE + LEAD FREE









Size :	DN 1/4" to 4"
Ends :	Male , Female BSP
Min Temperature :	- 10°C
Max Temperature :	+ 120°C
Max Pressure :	40 Bars
Specifications :	Anti blow-out stem PTFE packing Full bore
Materials :	Lead free brass CW510L body (CuZn42)

*the installation defects and wear defects are not covered by the guarantee

Sferaco 90 rue du Ruisseau 38297 St Quentin Fallavier Tel: + 33 (0) 474.94.15.90 Fax: + 33 (0) 474.95.62.08 Internet: www.sferaco.fr E-mail : sferaco@sferaco.fr

Information provided as an indication and subject to possible modification

REF. 509

BRASS BALL VALVE ACS PN40 REFERENCE + LEAD FREE

SPECIFICATIONS :

- Body in lead free brass CW510L (CuZn42)
- Brass CW510L according to the materials list authorized by the 4 MS
- Full bore
- Anti blow-out stem
- Stainless steel ball from DN3/4" to 4"
- PTFE packing
- Flat steel handle or aluminium butterfly handle
- Handle nut Dacromet coated (salt spray protection)
- Marking body " 9SP " with ACS, fabrication date and logo
- ACS number on the handle
- Reversible handle

USE :

- Heating, drinkable water, cooling, watering and irrigation
- Min temperature Ts : - 10°C
- Max temperature Ts :+ 120°C
- Max Pressure Ps : 40 bars up to DN 1" , 30 bars in 1"1/4 , 25 bars in 1"1/2 , 20 bars in 2" and 10 bars over

RANGE :

- Female / Female with blue flat steel handle **Ref. 501** DN 1/4" to 4"
- Female / Female with red flat steel handle **Ref. 509** DN 1/4" to 4"
- Female / Female with red butterfly handle **Ref. 525** DN 1/4" to 1"
- Male / Female with blue flat steel handle **Ref. 517** DN 1/4" to 2"
- Male / Female with red flat steel handle **Ref. 571** DN 1/4" to 2"
- Male / Female with red butterfly handle **Ref. 570** DN 1/4" to 1"
- Male / Male with blue flat steel handle **Ref. 518** DN 3/8" to 2"
- Male / Male with red flat steel handle **Ref. 566** DN 3/8" to 2"
- Male / Male with red butterfly handle **Ref. 565** DN 3/8" to 1"
- Female / Female with drainer with red flat steel handle **Ref. 510** DN 1/2" to 2"
- Female / Female with drainer with red butterfly handle **Ref. 530** DN 1/2" to 1"

PRESSURE / TEMPERATURE GRAPH (STEAM EXCLUDED) :

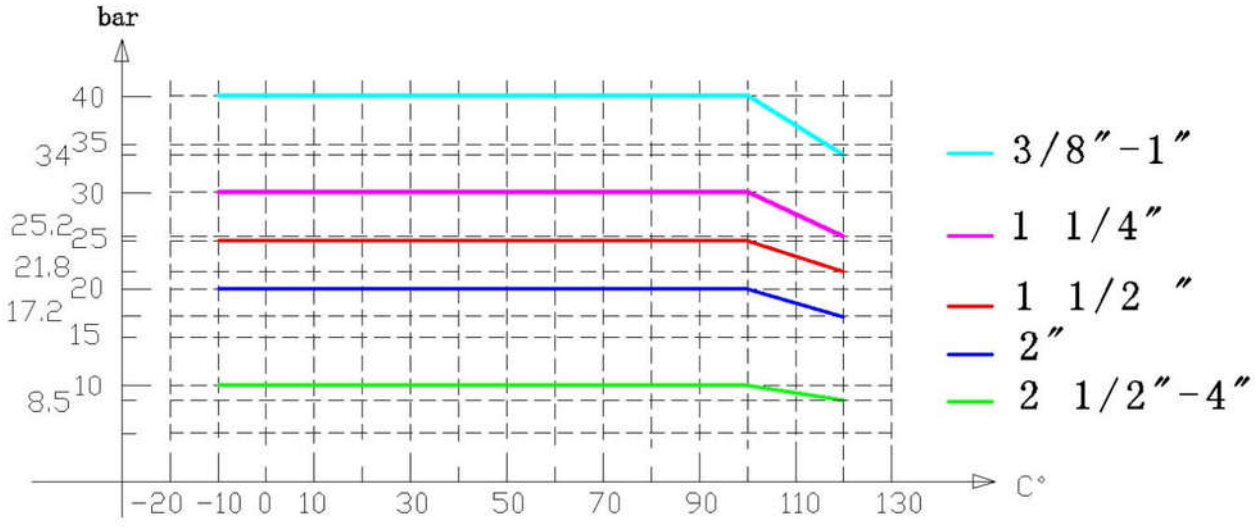

Information provided as an indication and subject to possible modification

BRASS BALL VALVE ACS PN40 REFERENCE + LEAD FREE

MATERIALS FEMALE – FEMALE TYPE :

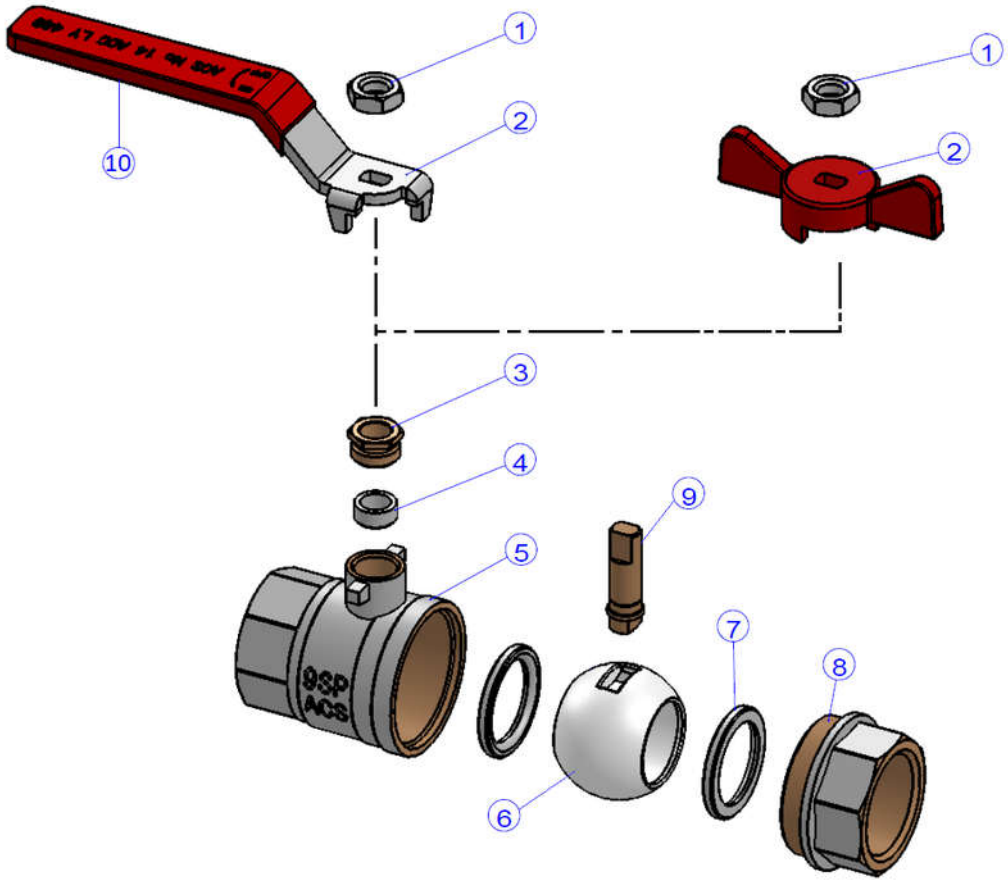

Item	Designation	Materials 501-509	Materials 525
1	Handle nut	Steel Q235 Dacromet coated	
2	Handle	Steel Q235 chromed	Aluminium
3	Packing nut	Brass CW 614 N according to EN 12165	
4	Packing	PTFE	
5	Body (external)	Brass CW 510 L (CuZn42) according to EN 12165 nickeled	
5	Body (internal)	Brass CW 510 L (CuZn42) according to EN 12165	
6	Ball DN1/4" - 1/2"	Brass CW 510 L (CuZn42) according to EN 12165 chromed	
6	Ball DN3/4" - 4"	AISI 304	
7	Seat	PTFE	
8	Bonnet (external)	Brass CW 510 L(CuZn42) according to EN 12165 nickeled	
8	Bonnet (internal)	Brass CW 510 L (CuZn42) according to EN 12165	
9	Stem	Brass CW 617 N according to EN 12165	
10	Handle cover	Plastic	-

Information provided as an indication and subject to possible modification

BRASS BALL VALVE ACS PN40 REFERENCE + LEAD FREE

MATERIALS MALE – FEMALE TYPES:

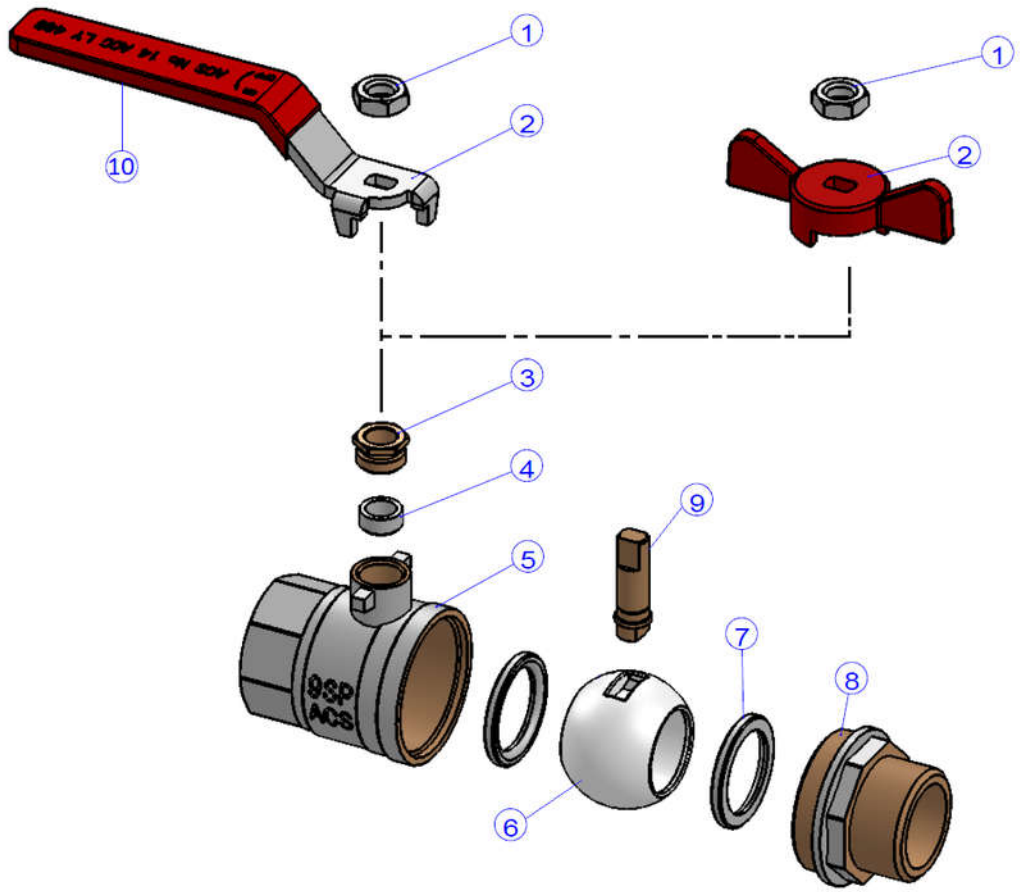

Item	Designation	Materials 517-571	Materials 570
1	Handle nut	Steel Q235 Dacromet coated	
2	Handle	Steel Q235 chromed	Aluminium
3	Packing nut	Brass CW 614 N according to EN 12165	
4	Packing	PTFE	
5	Body (external)	Brass CW 510 L (CuZn42) according to EN 12165 nickeled	
5	Body (internal)	Brass CW 510 L (CuZn42) according to EN 12165	
6	Ball DN1/4" - 1/2"	Brass CW 510 L (CuZn42) according to EN 12165 chromed	
6	Ball DN3/4" - 2"	AISI 304	
7	Seat	PTFE	
8	Bonnet (external)	Brass CW 510 L (CuZn42) according to EN 12165 nickeled	
8	Bonnet (internal)	Brass CW 510 L (CuZn42) according to EN 12165	
9	Stem	Brass CW 617 N according to EN 12165	
10	Handle cover	Plastic	-

Information provided as an indication and subject to possible modification

BRASS BALL VALVE ACS PN40 REFERENCE + LEAD FREE

MATERIALS MALE – MALE TYPES :

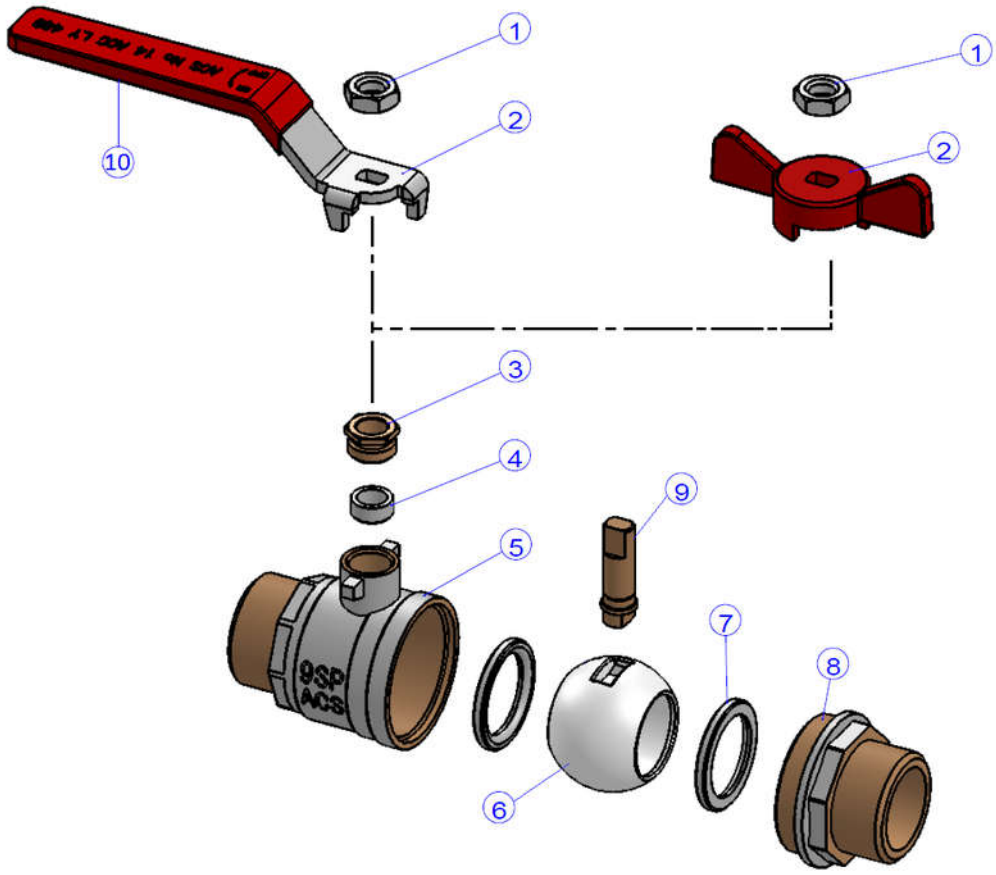

Item	Designation	Materials 518-566	Materials 565
1	Handle nut	Steel Q235 Dacromet coated	
2	Handle	Steel Q235 chromed	Aluminium
3	Packing nut	Brass CW 614 N according to EN 12165	
4	Packing	PTFE	
5	Body (external)	Brass CW 510 L (CuZn42) according to EN 12165 nickeled	
5	Body (internal)	Brass CW 510 L (CuZn42) according to EN 12165	
6	Ball DN3/8" - 1/2"	Brass CW 510 L (CuZn42) according to EN 12165 chromed	
6	Ball DN3/4" - 2"	AISI 304	
7	Seat	PTFE	
8	Bonnet (external)	Brass CW 510 L (CuZn42) according to EN 12165 nickeled	
8	Bonnet (internal)	Brass CW 510 L (CuZn42) according to EN 12165	
9	Stem	Brass CW 617 N according to EN 12165	
10	Handle cover	Plastic	-

Information provided as an indication and subject to possible modification

BRASS BALL VALVE ACS PN40 REFERENCE + LEAD FREE

MATERIALS FEMALE – FEMALE WITH DRAINER TYPES :

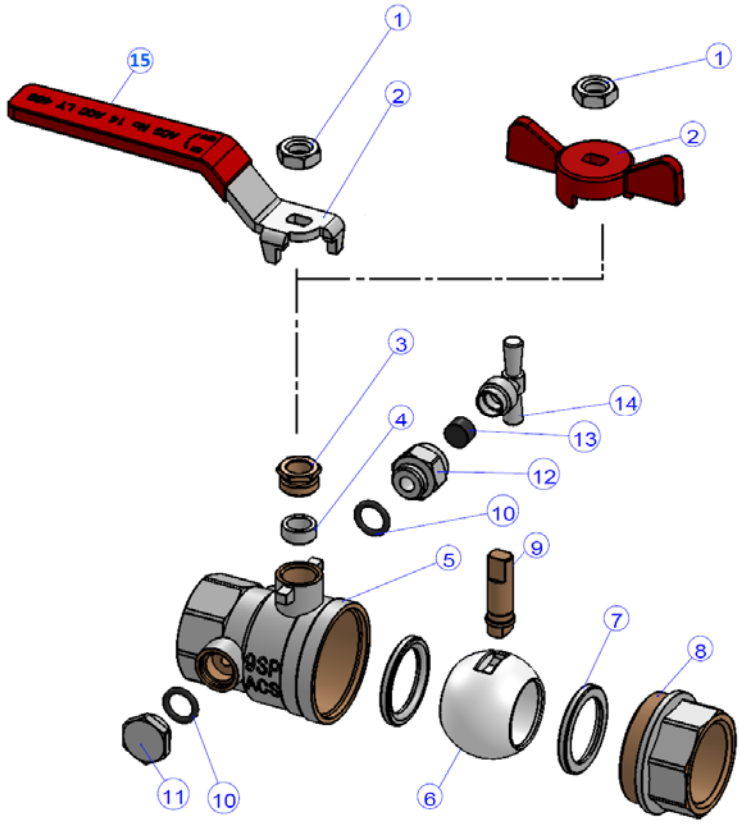

Item	Designation	Materials 510	Materials 530
1	Handle nut	Steel Q235 Dacromet coated	
2	Handle	Steel Q235 chromed	Aluminium
3	Packing nut	Brass CW 614 N according to EN 12165	
4	Packing	PTFE	
5	Body (external)	Brass CW 510 L (CuZn42) according to EN 12165 nickeled	
5	Body (internal)	Brass CW 510 L (CuZn42) according to EN 12165	
6	Ball DN1/2"	Brass CW 510 L (CuZn42) according to EN 12165 chromed	
6	Ball DN3/4" - 2"	AISI 304	
7	Seat	PTFE	
8	Bonnet (external)	Brass CW 510 L (CuZn42) according to EN 12165 nickeled	
8	Bonnet (internal)	Brass CW 510 L (CuZn42) according to EN 12165	
9	Stem	Brass CW 617 N according to EN 12165	
10	O ring	NBR	
11	Plug	Brass CW 617 N according to EN 12165 nickeled	
12	Manifold	Brass CW 617 N according to EN 12165 nickeled	
13	Ring	NBR	
14	Screw	Brass CW 617 N according to EN 12165 nickeled	
15	Handle cover	Plastic	-

Sferaco 90 rue du Ruisseau 38297 St Quentin Fallavier Tel: + 33 (0) 474.94.15.90 Fax: + 33 (0) 474.95.62.08 Internet: www.sferaco.fr E-mail : sferaco@sferaco.fr

Information provided as an indication and subject to possible modification

REF. 509

BRASS BALL VALVE ACS PN40 REFERENCE + LEAD FREE

FEMALE / FEMALE SIZE (in mm) :

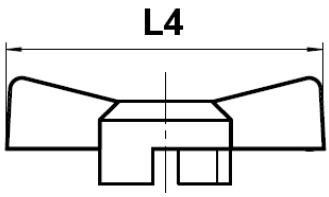

(525 type)

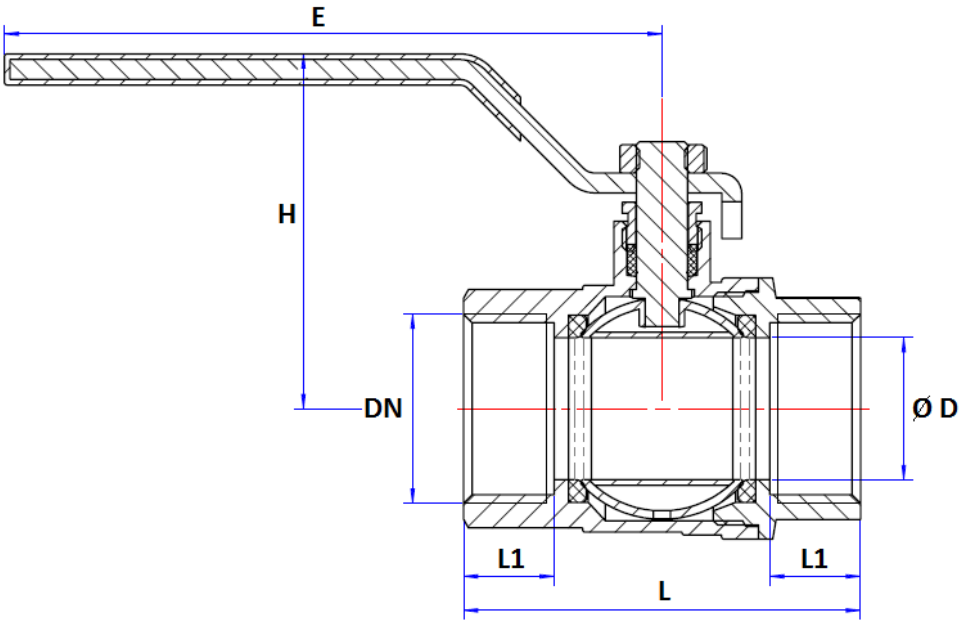

Stem size :

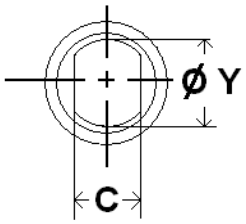

Ball DN 1/4"- 3/8"

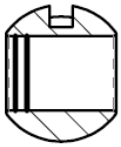

Ball DN 1/2"

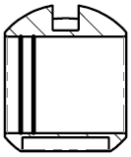

Ball DN 3/4"- 4"

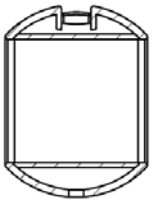

Ref.	DN	1/4"	3/8"	1/2"	3/4"	1"	1"1/4	1"1/2	2"	2"1/2	3“	4“
501 509 525	Ø D	9.5	10	15	20	25	32	39.5	49.5	63	79	99
	L	45	45	53	61.4	70	84	94	105	136	160	189
	L1	12	12	13	14.5	16	18	19	19	25	28	32
	L4	54	54	54	70	70						
	E	80	80	90	101	116	122	140	140	240	240	240
	H	42.3	42.3	46	58.5	62.5	73	78.5	98	124.5	135	149
	C	4.8	4.8	4.8	5.8	5.8	6.8	6.8	7.8	11.8	11.8	11.8
	Ø Y	6	6	8	9	9	9.8	9.8	9.8	13.5	13.5	13.5
Ref. 525	Weight (Kg)	0.125	0.109	0.177	0.250	0.415						
Ref. 501/509	Weight (Kg)	0.152	0.136	0.209	0.287	0.451	0.794	0.909	1.474	3.374	4.925	7.371

Sferaco 90 rue du Ruisseau 38297 St Quentin Fallavier Tel: + 33 (0) 474.94.15.90 Fax: + 33 (0) 474.95.62.08 Internet: www.sferaco.fr E-mail : sferaco@sferaco.fr

Information provided as an indication and subject to possible modification

BRASS BALL VALVE ACS PN40 REFERENCE + LEAD FREE

MALE / FEMALE SIZE (in mm) :

(570 type)

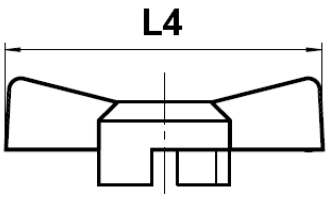

Stem size :

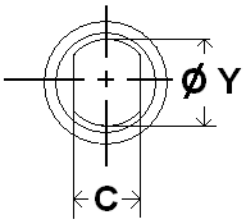

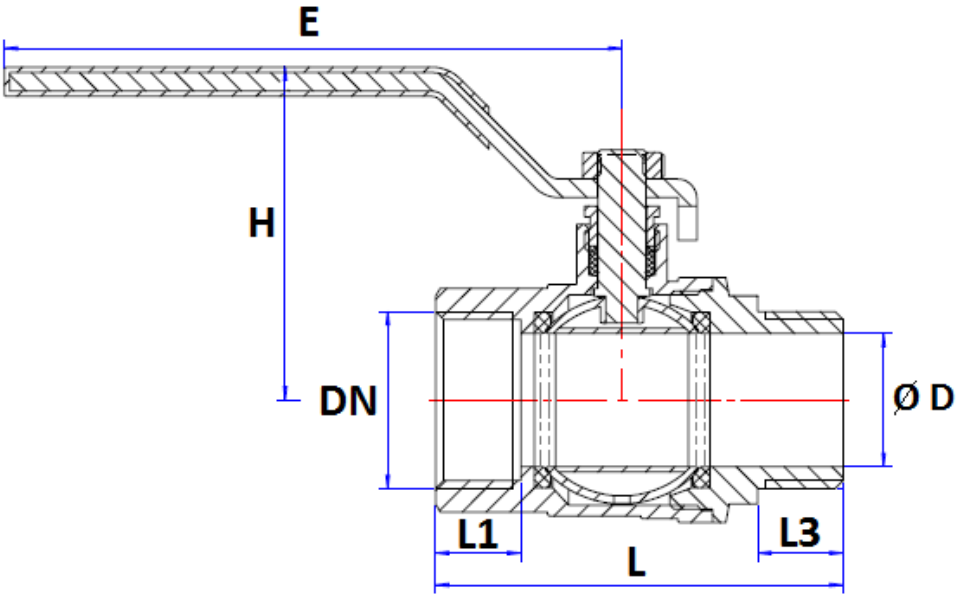

Ball DN 1/4"- 3/8"

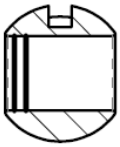

Ball DN 1/2"

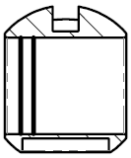

Ball DN 3/4"- 2"

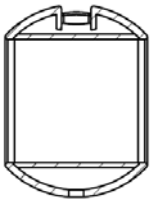

Ref.	DN	1/4"	3/8"	1/2"	3/4"	1"	1"1/4	1"1/2	2"
517 570 571	Ø D	9.5	10	15	20	25	32	39.5	49.5
	L	49.5	49.5	58.5	66.4	76.5	89.5	104.5	116
	L1	12	12	13	14.5	16	18	19	19
	L3	10	10	12	14	16	16	17.5	19
	L4	54	54	54	70	70			
	E	80	80	90	101	116	122	140	140
	H	42.3	42.3	46	58.5	62.5	73	78.5	98
	C	4.8	4.8	4.8	5.8	5.8	6.8	6.8	7.8
	Ø Y	6	6	8	9	9	9.8	9.8	9.8
Ref. 570	Weight (Kg)	0.123	0.119	0.186	0.254	0.420			
Ref. 517/571	Weight (Kg)	0.150	0.146	0.218	0.289	0.472	0.820	1.148	1.570

REF. 509

BRASS BALL VALVE ACS PN40 REFERENCE + LEAD FREE

MALE / MALE SIZE (in mm) :

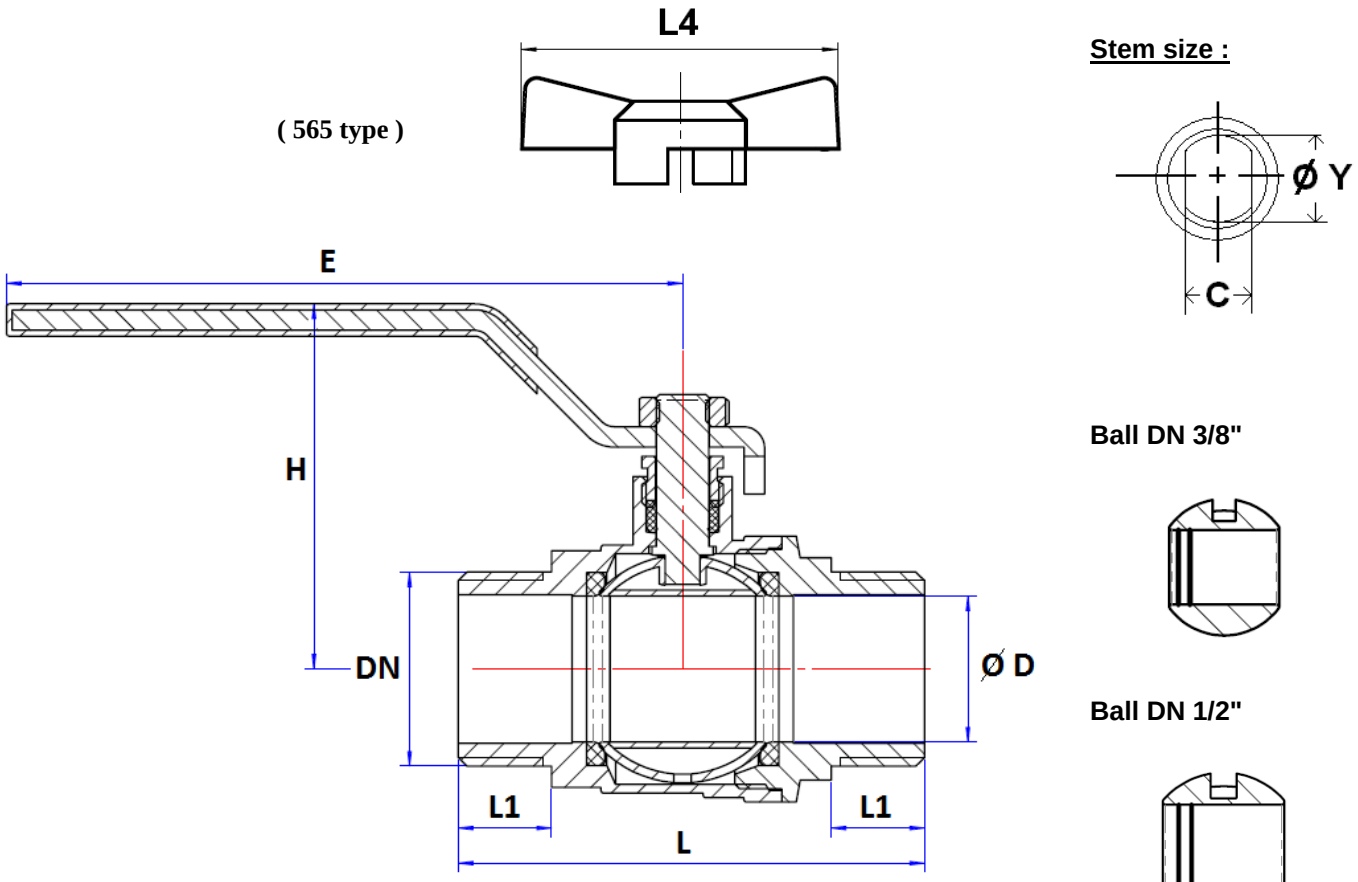

Stem size :

Ball DN 3/8"

Ball DN 1/2"

Ball DN 3/4"- 2"

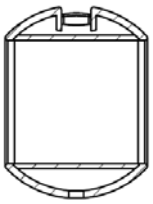

Ref.	DN	3/8"	1/2"	3/4"	1"	1"1/4	1"1/2	2"
518 565 566	Ø D	10	15	20	25	32	39.5	49.5
	L	50.5	59	69.4	80	94.5	108	116.5
	L1	10	12	14	16	16	17.5	19
	L4	54	54	70	70			
	E	80	90	101	116	122	140	140
	H	42.3	46	58.5	62.5	73	78.5	98
	C	4.8	4.8	5.8	5.8	6.8	6.8	7.8
	Ø Y	6	8	9	9	9.8	9.8	9.8
Ref. 565	Weight Kg)	0.123	0.183	0.257	0.396			
Ref. 518/566	Weight (Kg)	0.150	0.216	0.292	0.439	0.828	1.104	1.545

Sferaco 90 rue du Ruisseau 38297 St Quentin Fallavier Tel: + 33 (0) 474.94.15.90 Fax: + 33 (0) 474.95.62.08 Internet: www.sferaco.fr E-mail : sferaco@sferaco.fr

Information provided as an indication and subject to possible modification

REF. 509

BRASS BALL VALVE ACS PN40 REFERENCE + LEAD FREE

FEMALE / FEMALE WITH DRAINER SIZE (in mm) :

(530 type)

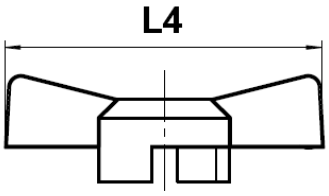

Stem size :

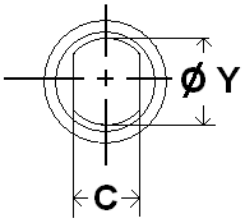

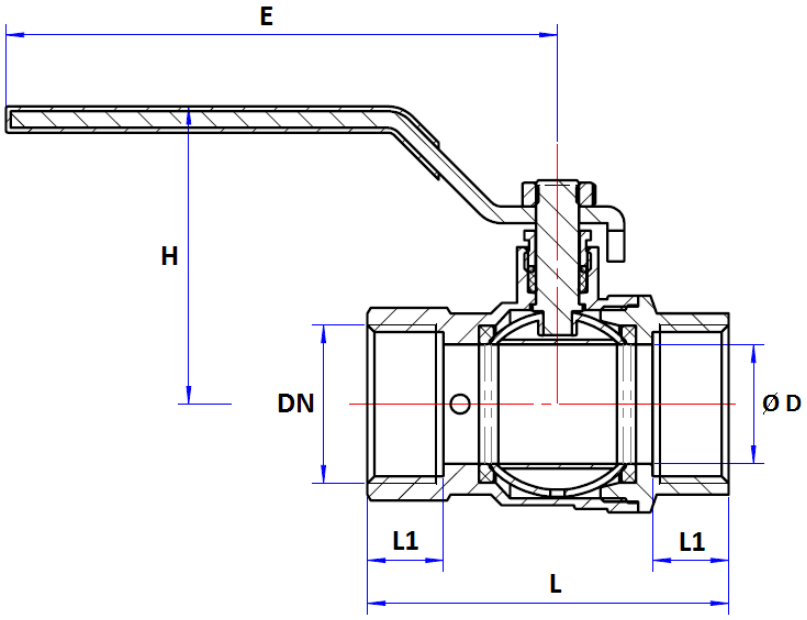

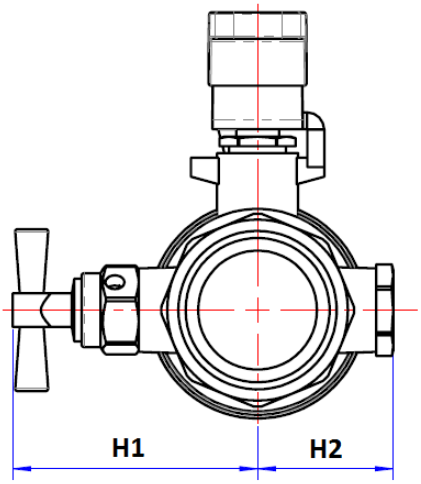

Ref.	DN	1/2"	3/4"	1"	1"1/4	1"1/2	2"
510 530	Ø D	15	20	25	32	39.5	49.5
	L	58.5	65.4	76	88.5	99.5	110.5
	L1	13.5	18.5	16	18	19	19
	E	90	101	116	122	140	140
	H	46	58.5	62.5	73	78.5	98
	H1	45.5	48.8	51.5	56.5	60.5	67.5
	H2	22.5	25.8	28.5	33.5	37.5	44.5
	C	4.8	5.8	5.8	6.8	6.8	7.8
	Ø Y	8	9	9	9.8	9.8	9.8
Ref. 510	Weight (Kg)	0.280	0.352	0.495	0.785	1.146	1.571
Ref. 530	Weight (Kg)	0.248	0.316	0.443			

Ball DN 1/2"

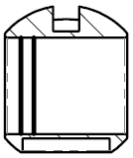

Ball DN 3/4" – 2"

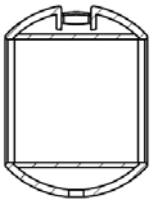

Sferaco 90 rue du Ruisseau 38297 St Quentin Fallavier Tel: + 33 (0) 474.94.15.90 Fax: + 33 (0) 474.95.62.08 Internet: www.sferaco.fr E-mail : sferaco@sferaco.fr

Information provided as an indication and subject to possible modification

BRASS BALL VALVE ACS PN40 REFERENCE + LEAD FREE

STANDARDS :

- Fabrication according to ISO 9001 :2008 and ISO 14001 : 2004
- DIRECTIVE 2014/68/UE : Products excluded from directive (Article 1, § 2.b)
- French water agreement **A.C.S. N° 14 ACC LY 469**
- Threaded female and male BSP cylindrical ends according to ISO 228-1

ADVICE : Our opinion and our advice are not guaranteed and SFERACO shall not be liable for the consequences of damages.
The customer must check the right choice of the products with the real service conditions.

REF. 509

BRASS BALL VALVE ACS PN40 REFERENCE + LEAD FREE

INSTALLATION INSTRUCTIONS

GENERAL GUIDELINES :

- Ensure that the valves to be used are appropriate for the conditions of the installation (type of fluid,pressure and temperature).
- Be sure to have enough valves to be able to isolate the sections of piping as well as the appropriate equipment for maintenance and repair.
- Ensure that the valves to be installed are of correct strenght to be able to support the capacity of their usage.
- **Installation of all circuits should ensure that their function can be automatically tested on a regular basis (at least two times a year).**

INSTALLATION INSTRUCTIONS :

- **Before installing the valves,clean and remove any objects from the pipes** (in particular bits of sealing and metal) which could obstruct and block the valves.

- **Ensure that both connecting pipes either side of the valve (upstream and downstream) are aligned (if they're not,the valves may not work correctly).**

- **Make sure that the two sections of the pipe (upstream and downstream) match,the valve unit will not absorb any gaps.Any distortions in the pipes may affect the thightness of the connection,the working of the valve and can even cause a rupture.**To be sure,place the kit in position to ensure the assembling will work.

- Before starting the fitting,ensure that the threads and tapping are clean.

- **If sections of piping do not have their final support in place,they should be temporarily fixed.This is to avoid unnecessary strain on the valve.**

- The theoretical lenghts given by ISO/R7 for the tapping are typically longer than required,the lenght of the thread should be limited, and **check that the end of the tube does not press right up to the head of the thread.**

- For the sealing assembly valve piping, it is essential to use products that are compatible with the requirements of the French water agreement ACS : **plumbers hemp proscribed**.

- Position the pipe clips on both sides of the valve.
- If mounting on an air conditioning with PER tubing and hoses,it is necessary to support the tubes and hoses with the fixing to avoid strain on the valve.
- When screwing the valve,ensure that you only rotate on screwed side by the 6 ended side.Use an open ended spanner or an adjustable spanner and not a monkey wrench.
- **Never use a vice to tighten the fixings of the valve.**

- Do not over tighten the valve.Do not block with any extensions as it may cause a rupture or weakening of the casing**.**

- **In general,for all valves used in buildings and heating,do not tighten above a torque of 30 Nm.**

The advice and assembly instructions above do not conform to any guarantee.
The information is given in general.It states what must not and must be done.
It is provided to ensure the safety of the personnel and the reliability of the valves.
The instructions in bold must be followed.

Sferaco 90 rue du Ruisseau 38297 St Quentin Fallavier Tel: + 33 (0) 474.94.15.90 Fax: + 33 (0) 474.95.62.08 Internet: www.sferaco.fr E-mail : sferaco@sferaco.fr

Information provided as an indication and subject to possible modification