Application notes for Safety Door-Interlocking-Devices AZM 190

Mounting Instructions

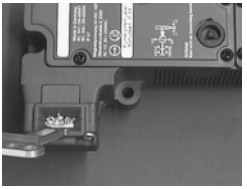

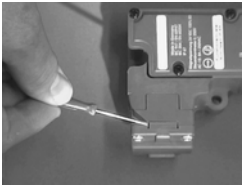

Fixing

Mounting Position: Optional. Operating head shall be protected against ingress of swarf, chips, coolant etc. A sealing mechanism in the operating head prevents ingress of floating objects and coarse particles of dirt as long as the door is open. When horizontally mounted, i.e. particles may settle on the sealing mechanism and being pushed into the operating head by the actuator at the next closing operation and leading to an obstruction of the interlocking device. In this mounting position the lid at the rear side of the operating head must be removed so dirt and other particles can leave again through this opening.

Interlocking Device: Fixing with 3 screws M6 x 25 DIN 912, washer DIN 125 and lock washer DIN 7980 (by pack). The devices must not be used as dead stop for the door. Furthermore the fitted devices shall be covered in such a way so insertion of a separate second actuator is effectively prevented. The ball lock in the operating head permits the door to be positioned, whose end position must be adjusted to the ball lock. An axial door clearance of approx. 5 mm actuator backlash is possible in locked state.

Actuator: With 2 one-way screws M4 (supplied) or with corresponding rivets. The actuator must be secured against dismantling with simple means.

K. A. Schmersal GmbH & Co. · Industrieschaltgeräte · Möddinghofe 30 ·
D-42232 Wuppertal · Tel. 49-(0)202-64 74-0 · Fax 49-(0)202-64 74-100
E-Mail info@schmersal.de · http://www.schmersal.de

Mounting of the operating head

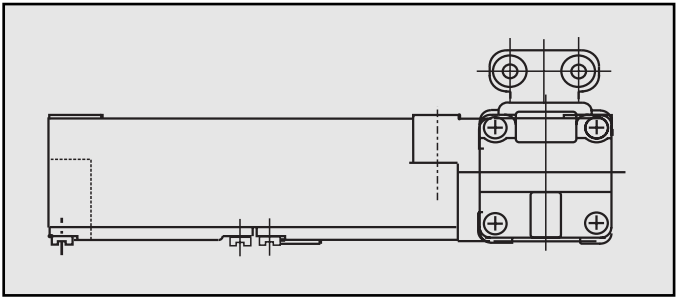

The enclosed one-way screws can be used to replace the standard screws supplied in the operating head.

This slight alteration ensures that the operating head cannot be tampered with after installation, if requested.

The advantage of being able to turn the heads to suit the conditions of installation and the simplified storage is thus not affected.

It is sufficient to replace 2 screws diagonal on the operating head.

In case of spring operated devices, the actuator must be inserted during rotation of the operating head.

Advice note

Requirements to the arrangement of the Interlocking Device

- At doors, hinged covers and sliding grills the device should be placed at the closing edge.
- The actuator should be precisely guided into the entry slot of the switch.
- The minimum swivel radius of doors and covers must not fall short of the manufacturers instructions.
- Formfitted fixing of the actuator to the safety guard.

- Fixing elements of switch and actuator shall be protected against self loosening.
- The cables to the switch shall be protected adequately.
- The device must not be used as a mechanical dead stop.

Requirements to the electrical circuit and the signal processing

- Signal processing according to the closed circuit principle.
- Safety Relay-Modules or Contactors shall be used.
- A short circuit element shall be used in accordance with the manufacturers instructions.

Wiring and circuit diagrams

Series AZM 190-../..rka (power operated versions)

02/01

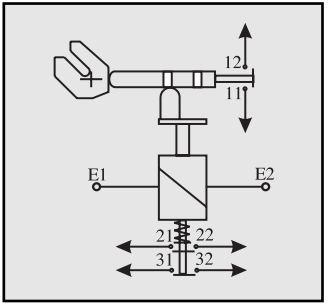

11/01

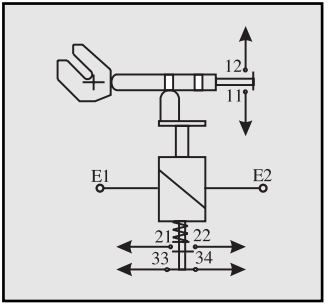

02/10

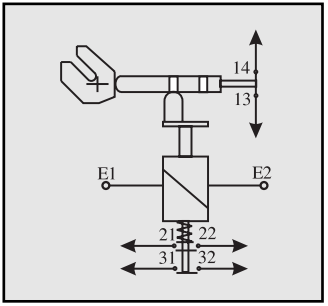

11/10

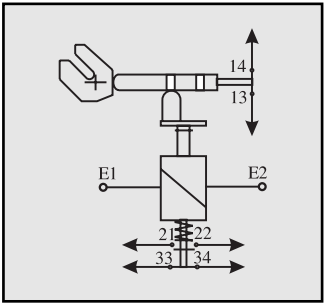

Series AZM 190-../..rk (spring operated versions)

02/01

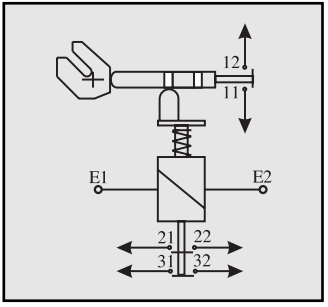

11/01

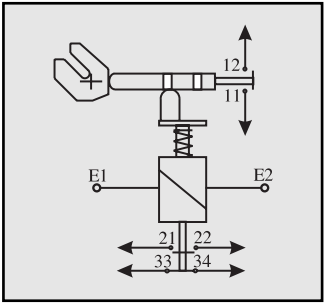

02/10

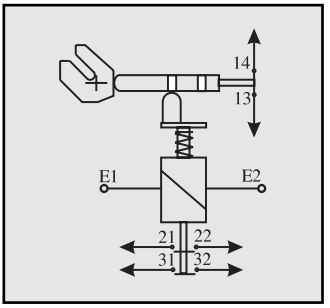

11/10

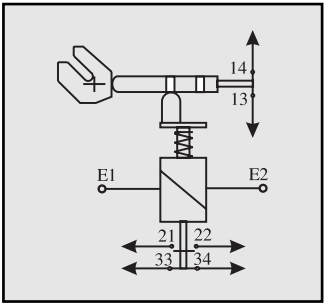

Dimensions

Versions AZM 190 (with standard actuator)

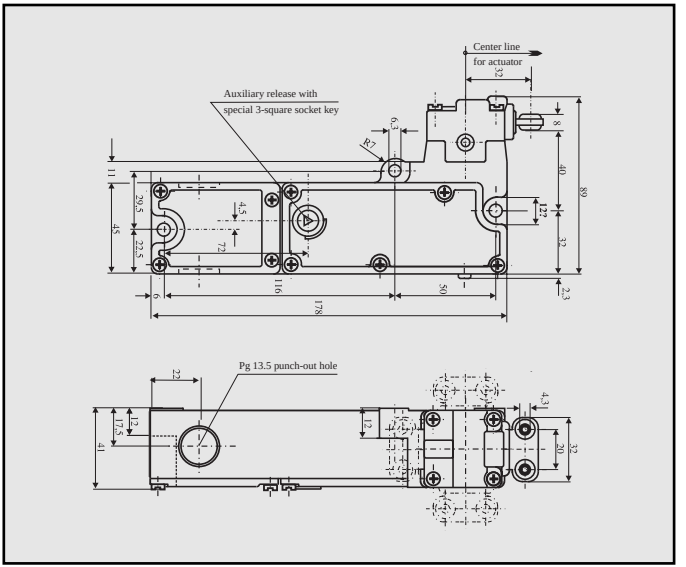

Versions AZM 190 (with standard actuator)

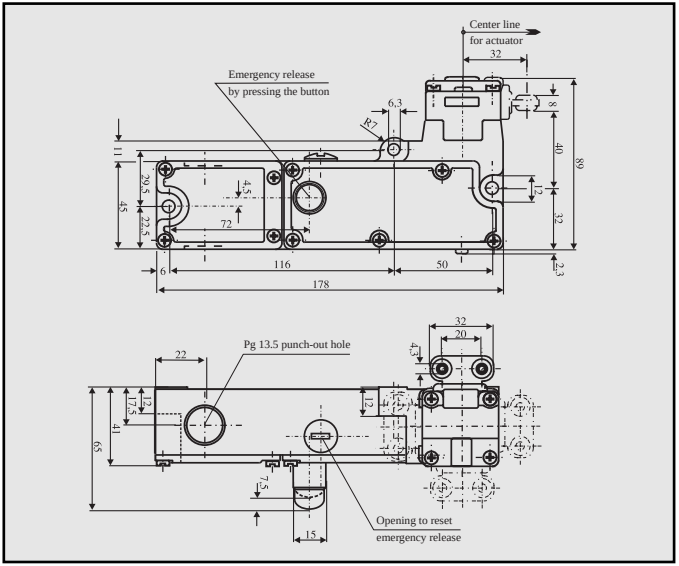

Technical Data

Electrical Data

Solenoid Operating voltage		24 VDC; 48 VAC; 115 VAC; 230 VAC Voltage tolerance +5%/–10%, c.d.f. = 100%			
Approx. solenoid power consumption	cold	24 VDC 300 mA	48 VAC 100 mA	115 VAC 72 mA	230 VAC 35 mA
	hot	250 mA	85 mA	50 mA	30 mA
Utilization category		in accordance with DIN/VDE 0660, part 200 = AC 15, DC 13			
Thermal rated performance		max. 10 A			
Short circuit protection		gG 10 A			

Mechanical Data

Environmental protection	Housing IP 67
Mechanical serviceable	2 x 10^6 switching cycles according DIN/ VDE 0660, part 200
Actuating force	Insertion 10 N, Withdrawal 20 N (holding force)
Extraction force	Typical ≥ 1,250 N, max. allowed door weight 40 kg. Door interlocks can be loaded with up to approx. 1,500 N (increase of force approx. 200 N/sec.) Beyond a tie force of ≥ 50 N a release of the door is no longer assured.

Temperature range

0 ... +50 °C

Service

The unit is maintenance-free.

Possible repairs, in particular exchange of safety-relevant components i.e. operating head, solenoids etc. can be carried out at the manufacturers site only for safety reasons.

SCHMERSAL

K. A. Schmersal GmbH & Co
Industrieschaltgeräte
Möddinghofe 30 ·
D-42232 Wuppertal

Tel. +49(0)202-64 74-0
Fax +49(0)202-64 74-100

E-Mail info@schmersal.de
http://www.schmersal.de