B82G - General purpose filter/regulator Excelon® Plus Modular System

- **Port size: 1/4" ... 3/8" (ISO G / PTF)**
- **Excelon® Plus design allows in-line installation or modular installation with other Excelon® Plus products**
- **5 or 40 micron particle and high efficiency water removal (> 95%)**
- **Double safety lock bowl**
- **Push to lock adjusting knob with built in tamper resistant feature**
- **Metal bowl with prismatic liquid level indicator lens**
- **Light weight Polycarbonate bowl with guard**
- **Easy to read flush mounted integrated pressure gauge**
- **Air purity classes in accordance to ISO8573-1:2010: 7:8:4 (40µm) 6:8:4 (5µm)**



Technical features

Medium:
Compressed air only
Maximum supply pressure:
Polycarbonate bowl: 10 bar (145 psi)
Metal bowl: 17 bar (246 psi)
Outlet pressure ranges:
0.3 ... 10 bar (4 ... 145 psi),
0.3 ... 4 bar (4 ... 58 psi) optional,
0.7 ... 17 bar (2 ... 246 psi) optional
Filter element:
5 µm & 40 µm
Port size:
G1/4, G3/8,1/4 PTF, 3/8 PTF
Gauge:
Integrated as standard
Gauge port 1/8 as option

Flow:
37 dm³/s at port size 1/4",
37 dm³/s at port size 3/8",
inlet pressure 10 bar (145 psi) ,
6.3 bar (91 psi) set pressure and a Δp: 1 bar (14.5 psi) droop from set.
Diaphragm Type:
Relieving
Drain:
Manual or automatic
Automatic drain operating conditions (float operated):
Bowl pressure required to close drain: > 0.35 bar (5 psi)
Bowl pressure required to open drain: ≤ 0.2 bar (2.9 psi)
Minimum air flow required to close drain: 1 dm³/s.

Ambient/Media temperature:
Polycarbonate bowl:
-10 ... +60°C (+14 ... +140°F)
Metal bowl:
-20 ... +65°C (-4 ... +149°F)
Air supply must be dry enough to avoid ice formation at temperatures below +2°C (+35°F).
Atex:
Filter/regulators B82 are in conformity with
Atex 2014/34/EU
Ⓔx II 2 GD
Ex h IIC T6 Gb
EX h IIIC T85°C Db

Materials:
Body: Die cast aluminum
Body covers: ABS
Bonnet: Acetal/ Aluminum
Valve: PP
Transparent Bowl : Polycarbonate with Polypropylene Guard.
Metal Bowl: Die cast Zinc with PA liquid level indicator lens
Filter element: sintered PP
Bowl 'O'- ring: Chloroprene
Elastomers: NBR

Technical data B82G—standard models

Symbol	Port	Drain	Pressure range (bar)	Filter element (µm)	Bowl	Weight (kg)	Model *1)
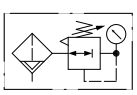	G1/4	Auto	0,3 ... 10	40	Guarded polycarbonate	0,30	B82G-2GK-AP3-RMG
	G3/8	Auto	0,3 ... 10	40	Guarded polycarbonate	0,30	B82G-3GK-AP3-RMG
	G1/4	Auto	0,3 ... 10	40	Metal with level indicator	0,50	B82G-2GK-AD3-RMG
	G3/8	Auto	0,3 ... 10	40	Metal with level indicator	0,50	B82G-3GK-AD3-RMG
	G1/4	Manual	0,3 ... 10	40	Guarded polycarbonate	0,30	B82G-2GK-QP3-RMG
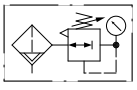	G3/8	Manual	0,3 ... 10	40	Guarded polycarbonate	0,30	B82G-3GK-QP3-RMG
	G1/4	Manual	0,3 ... 10	40	Metal with level indicator	0,50	B82G-2GK-QD3-RMG
	G3/8	Manual	0,3 ... 10	40	Metal with level indicator	0,50	B82G-3GK-QD3-RMG

*1) All models shown here are supplied with integrated gauge applicable for flow direction left to right.
With flow direction right to left please use the online configurator www.norgren.com/air-preparation-configurator or contact Norgren

Our policy is one of continued research and development. We therefore reserve the right to amend, without notice, the specifications given in this document. (2017 - 9217b) © 2020 Norgren Ltd

Option selector *1)

B82G–★★★–★★★–R★★

Port size	Substitute
1/4"	2
3/8"	3
Thread form	**Substitute**
PTF	A
ISO G (standard)	G
Adjustment	**Substitute**
Knob (standard)	K
T-bar	**T*2)**
Drain	**Substitute**
Manual (standard)	Q
Auto drain (standard)	A
Bowl	**Substitute**
Metal with liquid indicator	D
Transparent with guard (standard)	P

Gauge	Substitute
With integrated gauge (standard)	G
Without integrated gauge but with gauge port 1/8"	N
Pressure range *3)	**Substitute**
0.3 to 4 bar	F
0.3 to 10 bar (standard)	M
0.7 to 17 bar	S*2)
Element	**Substitute**
40 µm (standard)	3
5 µm	1

*3) Outlet pressure can be adjusted to pressures in excess of, and less than, those specified.
Do not use these units to control pressures outside of the specified ranges.

*1) All models shown here are applicable for flow direction left to right.
With flow direction right to left please use the online configurator www.norgren.com/air-preparation-configurator or contact Norgren

*2) Units with 246 psi (17 bar) outlet pressure range are available only with the T-bar adjustment; therefore substitute T at the 7th position and S at the 9th position. T-bar handle only available with 17 bar option.

Flow characteristics

Inlet pressure: 10 bar (145 psi)
Range: 0.3...10 bar (4...145 psi)
Port size: 1/4", 5 µm element

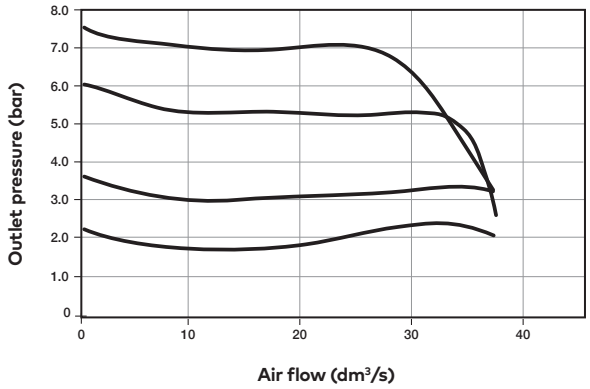

Inlet pressure: 10 bar (145 psi)
Range: 0.3...10 bar (4...145 psi)
Port size: 3/8", 5 µm element

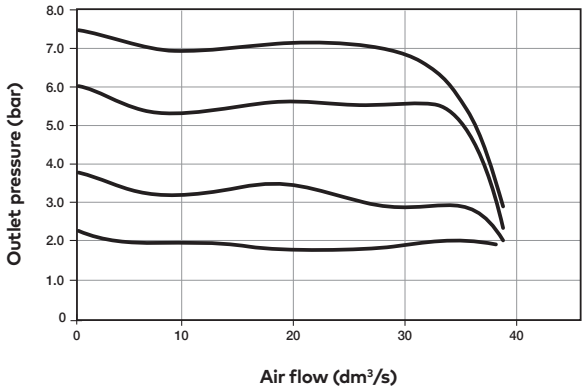

Inlet pressure: 10 bar (145 psi)
Range: 0.3...10 bar (4...145 psi)
Port size: 1/4", 40 µm element

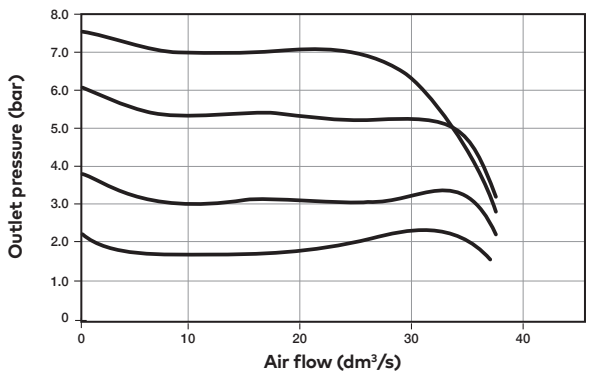

Inlet pressure: 10 bar (145 psi)
Range: 0.3...10 bar (4...145 psi)
Port size: 3/8", 40 µm element

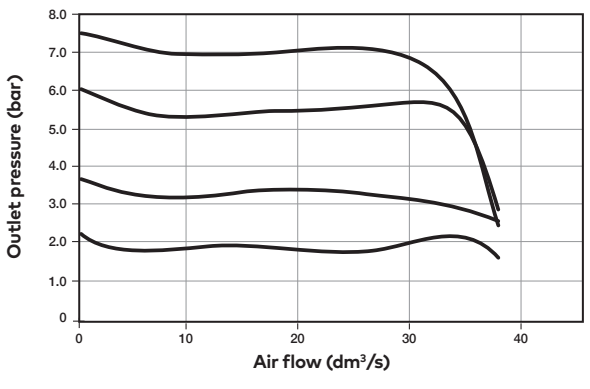

Our policy is one of continued research and development. We therefore reserve the right to amend, without notice, the specifications given in this document. (2017 - 9217b) © 2020 Norgren Ltd

Accessories

Quikclamp®



Page 6

820014-51KIT

Quikclamp® with bracket assembled



Page 6

820014-52KIT

Neck mounting bracket and panel nut



Page 7

820068-51KIT

Panel mounting nut



Page 7

820048-89KIT

Mounting bracket



Page 7

820024-50KIT

Integrated gauge 10 bar gauge



820073-01KIT

Integrated gauge 20 bar gauge



820073-02KIT

Integrated gauge 4 bar gauge



820073-03KIT

Gauge adaptor kit 1/8 PTF



820100-01KIT

Gauge adaptor kit R 1/8



820100-02KIT

Pressure sensing block 1/4 PTF



Page 7

820016-50KIT

Pressure sensing block G1/4



Page 7

820016-51KIT

Porting block 3/8" PTF



Page 7

820028-50KIT

Porting block G3/8



Page 7

820028-53KIT

Pressure switch interface block (18D pressure switch) G1/4



Page 8

0523109000000000

Pressure switch 18D (0,5 ... 8bar) *1



Page 8

0881300

Digital pressure switch 51D (-1 ... 10 bar) *2



Page 8

0860810

Padlock



84a0055-01KIT

Lockout device



840055-02KIT

*1) Flanged version. For other pressure ranges, please see data sheet 5.11.001
*2) For other pressure ranges, please see data sheet 5.11.385

Gauges (For regulators with gauge port instead of integrated port)

Port Adaptors

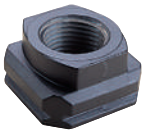

Page 8

1/4 PTF	820015-02KIT
3/8 PTF	820015-03KIT
G1/4	820015-08KIT
G3/8	820015-09KIT

Center back connection, white face (for full technical specification see datasheet 8.900.900)



Pressure range (bar)*3)	(MPa)	(psi)	ø	Thread size	Model
0 ... 6	0 ... 0,6	0 ... 84	40 mm	R1/8	18-015-885
0 ... 10	0 ... 1	0 ... 145	40 mm	R1/8	18-015-989
0 ... 25	0 ... 2,5	0 ... 362	40 mm	R1/8	18-015-908

*3) primary scale

Our policy is one of continued research and development. We therefore reserve the right to amend, without notice, the specifications given in this document. (2017 - 9217b) © 2020 Norgren Ltd

Maintenance/Service

Filter cartridge 5 micron



820038-50KIT

Filter cartridge 40 micron



820038-51KIT

Auto drain kit with metal Nut - Imperial



6000-61KIT

Auto drain kit with metal Nut - Metric



6000-60KIT

R82 / B82 Elastomer Kit



FRLB82-KIT

Spare parts

Filter Bowl (Guarded Poly bowl with auto drain 6 mm PIF)



820025-51KIT

Filter Bowl (Guarded Poly bowl with manual drain)



820025-50KIT

Filter Bowl (Metal with S/ Glass & auto drain, 6 mm PIF)



820003-51KIT

Filter Bowl (Metal with S/ Glass & manual drain)



820003-50KIT

Filter Bowl (Guarded Poly bowl with auto drain, 1/4 PIF)



820025-53KIT

Filter Bowl (Metal with S/ Glass & auto drain, 1/4 PIF)



820003-56KIT

Our policy is one of continued research and development. We therefore reserve the right to amend, without notice, the specifications given in this document. (2017 - 9217b) © 2020 Norgren Ltd

Dimensions

Dimensions in mm
Projection/First angle

1/4 Turn Manual Drain

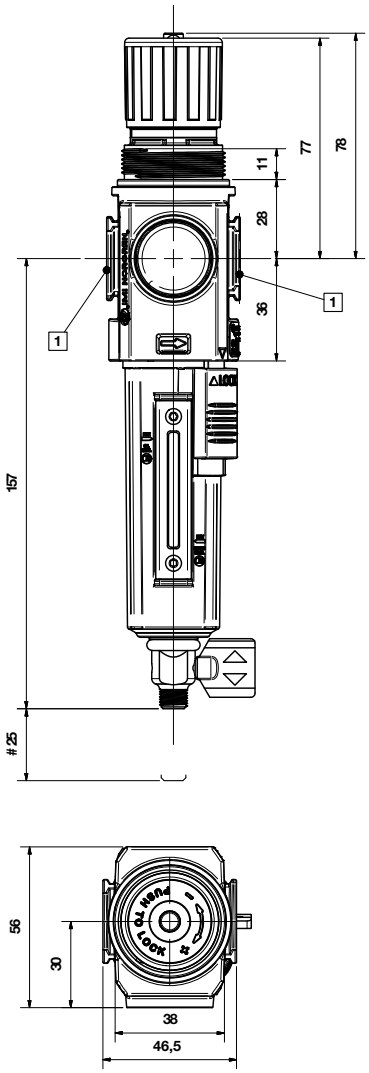

Automatic Drain

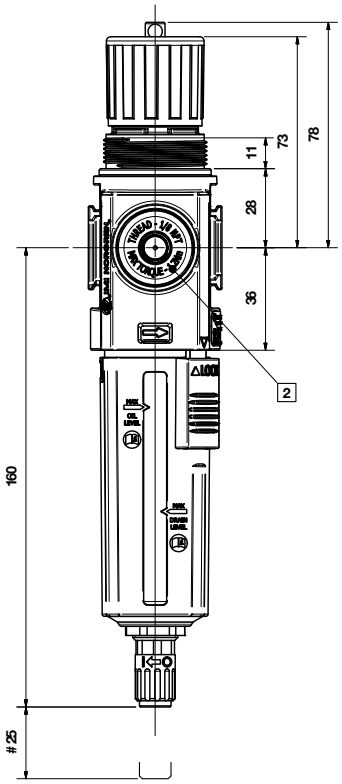

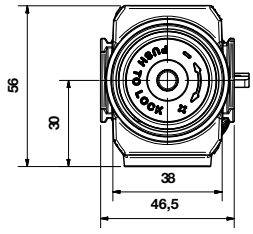

T-bar adjustment

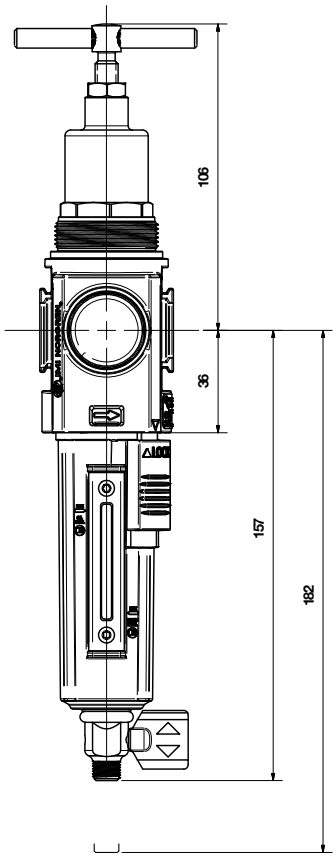

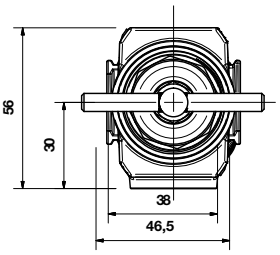

Minimum clearance for bowl removal

1 Main ports 1/4", 3/8" (ISO G/PTF)

2 Gauge port Rc 1/8 for ISO G and 1/8 PTF for PTF main ports

Our policy is one of continued research and development. We therefore reserve the right to amend, without notice, the specifications given in this document. (2017 - 9217b) © 2020 Norgren Ltd

Accessories

Dimensions in mm
Projection/First angle

Quikclamp® with wall bracket

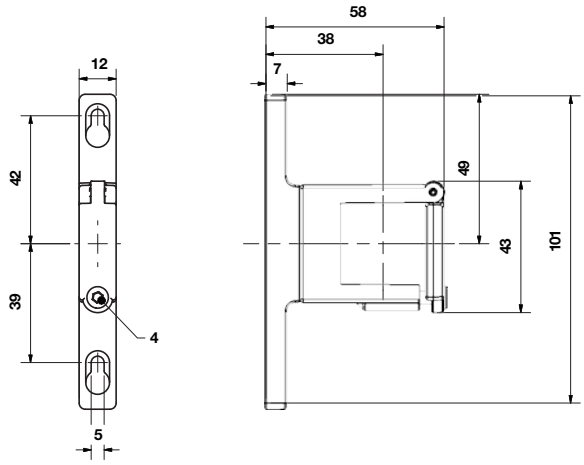

Neck mounting bracket

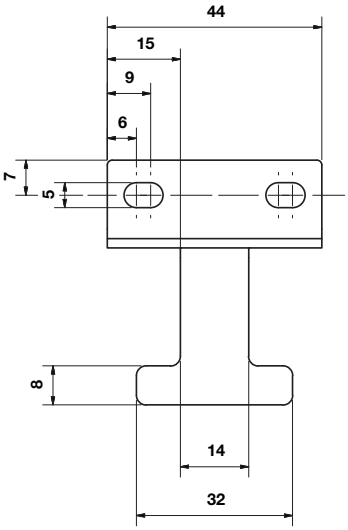

Quikclamp®

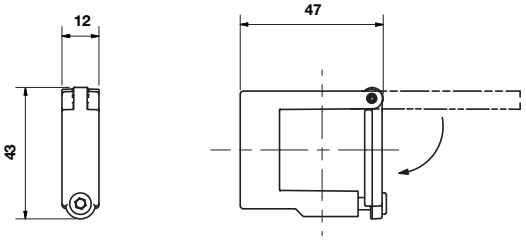

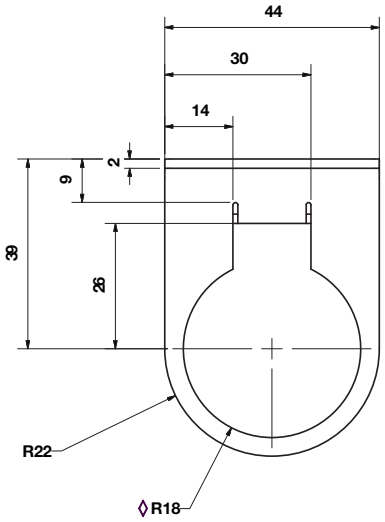

Panel mounting nut

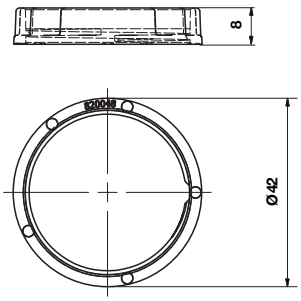

Recommended panel hole size:
ø 36.25 ... 36.75 mm

Panel thickness:
up to 4mm

Universal Mounting bracket

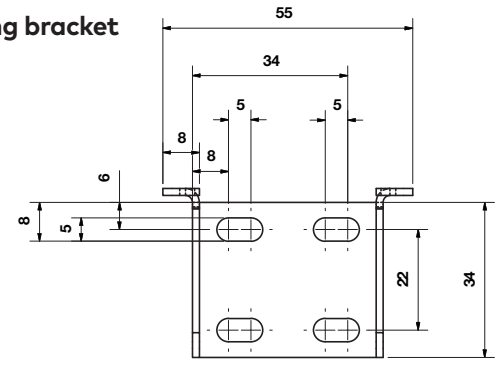

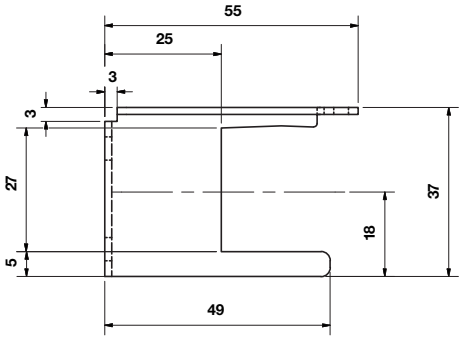

Our policy is one of continued research and development. We therefore reserve the right to amend, without notice, the specifications given in this document. (2017 - 9217b) © 2020 Norgren Ltd

Pressure sensing block

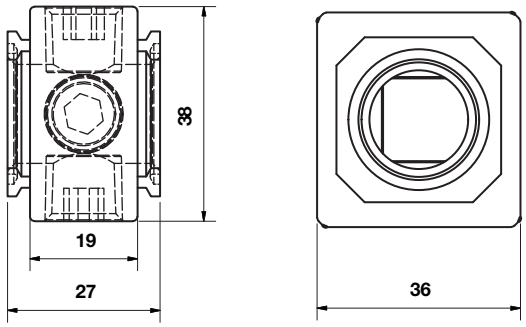

Full flow porting block

Dimensions in mm
Projection/First angle

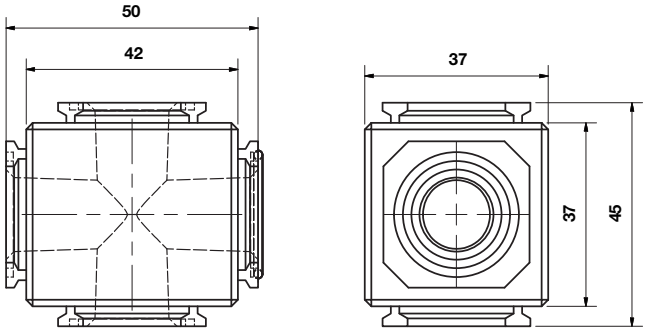

Porting block for 18D pressure switch

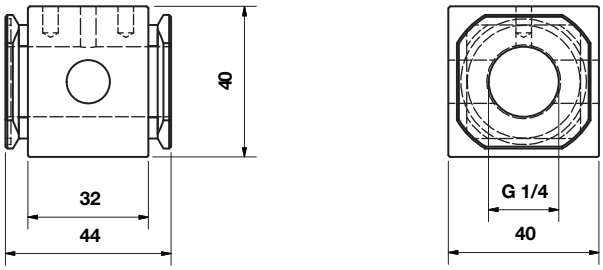

18D Pressure switch

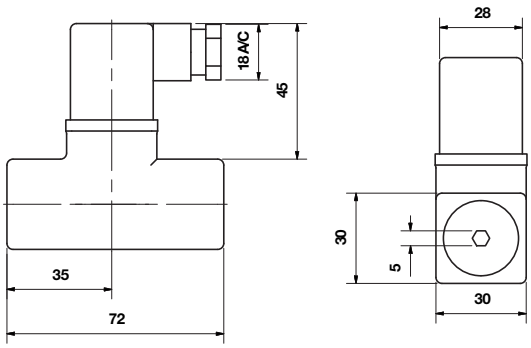

18D Porting block and 18D assembled

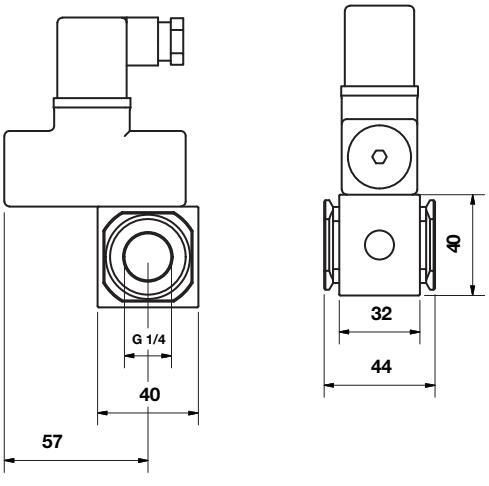

Pipe adaptor

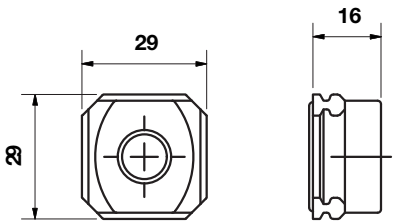

Our policy is one of continued research and development. We therefore reserve the right to amend, without notice, the specifications given in this document. (2017 - 9217b) © 2020 Norgren Ltd

51D Pressure switch - digital

Dimensions in mm
Projection/First angle

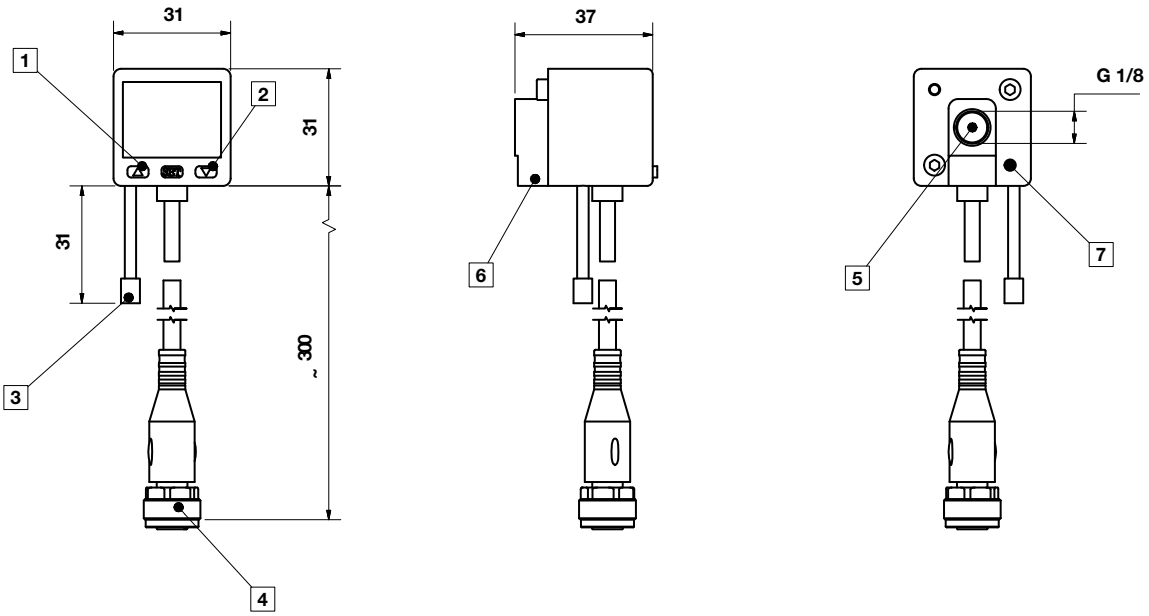

1 Switch OUT 1, green LED
2 Switch OUT 2, red LED
3 Dustproof protector
4 Connector M12 x 1
5 Inlet port
6 Alternative inlet port G1/8 plugged
7 Thread for mounting screw

Warning

These products are intended for use in industrial compressed air systems only. Do not use these products where pressures and temperatures can exceed those listed under »**Technical features/ data**«.
Before using these products with fluids other than those specified, for non-industrial applications, life-support systems or other applications not within published specifications, consult Norgren Ltd.

Through misuse, age, or malfunction, components used in fluid power systems can fail in various modes.

The system designer is warned to consider the failure modes of all component parts used in fluid power systems and to provide adequate safeguards to prevent personal injury or damage to equipment in the event of such failure.
System designers must provide a warning to end users in the system instructional manual if protection against a failure mode cannot be adequately provided.
System designers and end users are cautioned to review specific warnings found in instruction sheets packed and shipped with these products.

Our policy is one of continued research and development. We therefore reserve the right to amend, without notice, the specifications given in this document. (2017 - 9217b) © 2020 Norgren Ltd