Large hollow shaft robust, optical | A02H (hollow shaft) | Push-pull / RS422 / SinCos



The Heavy Duty incremental encoder type A02H boasts a high degree of ruggedness in a very compact design.

Its special construction makes it perfect for all applications in very harsh environments.

High rotational speed | High protection level | High shaft load capacity | Shock / vibration resistant | Magnetic field proof | Optical sensor

Heavy Duty - robust

- Special shaft connection with interlocked bearings.
- Balanced stainless steel clamping ring.
- Optional isolation inserts available to protect against shaft currents.

Compact and versatile

- Only 49 mm installation depth.
- With cable connections, M12, M23, Sub-D or MIL connectors.
- With push-pull, RS422 or SinCos interface.

Order code Hollow shaft

8.A02H . X X X X . XXXX
Type — a b c d — e

a *Flange*
1 = without mounting aid
2 = with spring element, short
3 = with spring element, long
5 = with torque stop, long

6 = with torque stop, short [1]

b *Through hollow shaft*
C = ø 20 mm [0.79“]
6 = ø 24 mm [0.94“]
5 = ø 25 mm [0.98“]
3 = ø 28 mm [1.10“]
A = ø 30 mm [1.18“]
H = ø 35 mm [1.38“]
2 = ø 38 mm [1.50“]
B = ø 40 mm [1.57“]
1 = ø 42 mm [1.65“]
4 = ø 1“

D = ø 1/2“ [1]
E = ø 5/8“ [1]
F = ø 3/4“ [1]
G = ø 1 1/8“ [1]
N = ø 1 1/4“ [1]

c *Output circuit (with inverted signal) / supply voltage*
1 = RS422 / 5 V DC
4 = RS422 / 10 ... 30 V DC
5 = Push-pull / 5 ... 30 V DC
3 = Push-pull / 10 ... 30 V DC
8 = SinCos, 1 Vpp / 5 V DC
9 = SinCos, 1 Vpp / 10 ... 30 V DC
A = Push-pull (7272 compatible) / 5 ... 30 V DC

D = RS422 / 5 ... 30 V DC [1]

d *Type of connection*
1 = radial cable, 1 m [3.28‘] PVC
A = radial cable, special length PVC *)
2 = radial M23 connector, 12-pin
E = radial M12 connector, 8-pin
G = Sub-D connector, male contact, 9-pin, double-row [2]
R = radial M12 connector, 5-pin [4]

K = MIL connector, 7-pin [1] [4]
D = MIL connector, 10-pin [1]

*) Available special lengths (connection type A):
2, 3, 5, 8, 10, 15 m [6.56, 9.84, 16.40, 26.25, 32.80, 49.21‘]
order code expansion .XXXX = length in dm
ex.: 8.A02H.111A.2048.0030 (for cable length 3 m)

e *Pulse rate*
50, 360, 512, 600, 1000, 1024, 1500, 2000, 2048, 2500, 4096, 5000
(e.g. 360 pulses => 0360)

SinCos version only available with pulses ≥ 1024

Optional on request
- other pulse rates on request
- Ex 2/22 [3]

1) US version.
2) Protection level IP40.
3) For the cable connection type, cable material PUR.
4) Without inversion, cannot be combined with SinCos..

© Fritz Kübler GmbH, subject to errors and changes. 05/2023

Large hollow shaft robust, optical | A02H (hollow shaft) | Push-pull / RS422 / SinCos

Mounting accessory for hollow shaft encoders	Dimensions in mm [inch]	Order no.
Torque pin, ø 6 mm for flange with spring element (flange type 2 + 3)	with fixing thread 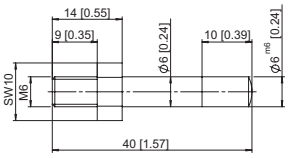	**8.0010.4700.0003**
Tether arm, flexible 	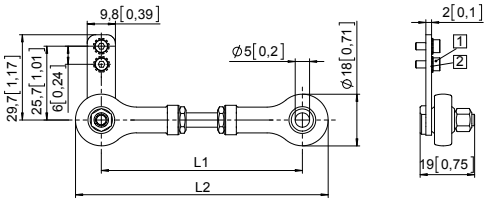 1 Socket screw M2.5 x 6 [0.24] 2 Lock washer Tether arm / L1 / L2 70 mm [2.76"] / 64 ... 74 [2.51 ... 2.91] / 82 ... 92 [3.23 ... 3.62] 100 mm [3.94"] / 94 ... 104 [3.70 ... 4.09] / 112 ... 122 [4.41 ... 4.80] 150 mm [5.91"] / 144 ... 154 [5.67 ... 6.06] / 162 ... 172 [6.38 ... 6.77]	70 mm [2.76"] **8.0010.40S0.0000** 100 mm [3.94"] **8.0010.40T0.0000** 150 mm [5.91"] **8.0010.40U0.0000**
Torque stop, short 	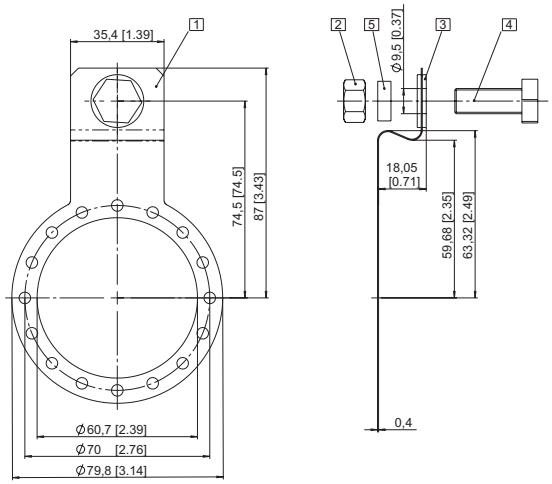 1 Curved spring element 2 Hexagonal nut 3/8 - 16 UNC 3 Washer (isolating) 4 Hexagonal screw 3/8 16 UNC x 1" 5 Washer D10.4 x 15 x 15	**8.0010.4T00.0000**
Stator coupling 	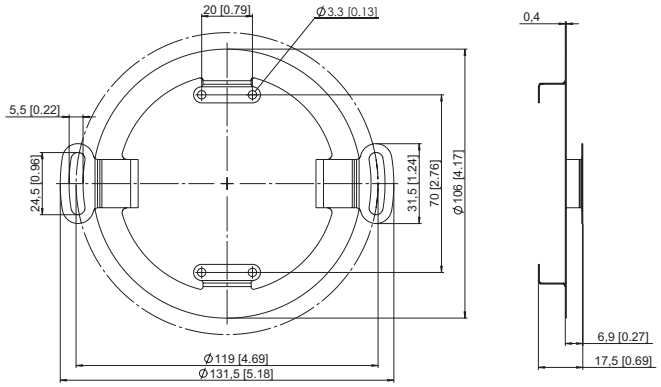	**8.0010.40V0.0000**

© Fritz Kübler GmbH, subject to errors and changes. 05/2023

Large hollow shaft robust, optical	A02H (hollow shaft)	Push-pull / RS422 / SinCos

Mounting accessory for hollow shaft encoders

Order no.

Protective cover



For applications with a very high degree of pollution, Kübler now offers a protective cover for
- Improved reliability
- Extension of the service life of the encoder

Scope of delivery:
- Protective cover
- Torque stop (8.0010.4T00.0000)
- 3 screws for fixing to the encoder

8.0010.40Y0.0001

Tapered shaft mounting kit

for A02H with hollow shaft, ø 38 mm [1.50“]



For use in upgrading for tapered shaft mounting. Tapered shafts are used for high-precision direct coupling.
An isolation insert is also included in the mounting kit; this reliably protects the encoder from shaft currents.
Included in the set:
- Insert for cone blind hole, cone 1:10, 17 mm [0.67“] length
- Isolation insert
- Allen screw for central fixing

8.0010.4028.0000

Isolation insert for hollow shaft, ø 38 mm [1.50“]

Temperature range -40 °C ... +115 °C [-40 °F ... +239 °F]



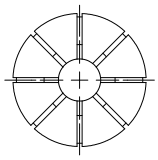

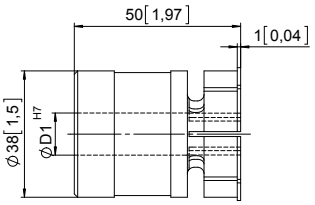

Isolation inserts prevent currents from passing through the encoder bearings. These currents can occur when using inverter controlled three-phase or AC vector motors and considerably shorten the service life of the encoder bearings. For more details please call our technical hotline (+49 7720 3903 952) or send us an email (info@kuebler.com)

ø D1:	
12 mm	**8.0010.4091.0000**
14 mm	**8.0010.4027.0000**
15 mm	**8.0010.4038.0000**
16 mm	**8.0010.4019.0000**
18 mm	**8.0010.4080.0000**
20 mm	**8.0010.4011.0000**
25 mm	**8.0010.4012.0000**
30 mm	**8.0010.4016.0000**
32 mm	**8.0010.4015.0000**
1/2“	**8.0010.4013.0000**
5/8“	**8.0010.4070.0000**
3/4“	**8.0010.4090.0000**
1“	**8.0010.4050.0000**
1 1/4“	**8.0010.4060.0000**

Isolation insert for hollow shaft, ø 42 mm [1.65“]

external diameter 42 mm [1.65“] / internal diameter 38 mm [1.50“]	**8.0010.4017.0000**
external diameter 42 mm [1.65“] / internal diameter 12 mm [0.47“]	**8.0010.4029.0000**

Cables and connectors

Order no.

Preassembled cables

M12 female connector with coupling nut, 8-pin, A coded, straight single-ended 2 m [6.56‘] PVC cable	**05.00.6041.8211.002M**
M23 female connector with coupling nut, 12-pin, cw single-ended 2 m [6.56‘] PVC cable	**8.0000.6201.0002**

Connectors

M12 female connector with coupling nut, 8-pin, A coded, straight (metal)	**05.CMB 8181-0**
M12 female connector with coupling nut, 8-pin, A coded, straight (stainless steel V4A)	**8.0000.5136.0000.V4A**
M23 female connector with coupling nut, 12-pin, cw (metal)	**8.0000.5012.0000**

Further Kübler accessories can be found at: kuebler.com/accessories
Further Kübler cables and connectors can be found at: kuebler.com/connection-technology

© Fritz Kübler GmbH, subject to errors and changes. 05/2023

Large hollow shaft robust, optical | **A02H (hollow shaft)** | **Push-pull / RS422 / SinCos**

Technical data

Mechanical characteristics

Maximum speed		6000 min^{-1} [1]
	at 60 °C [140 °F]	2500 min^{-1} [1]
Mass moment of inertia		< 220 x 10^{-6} kgm^2 [2]
Starting torque with sealing at 20 °C [68 °F]		< 0.2 Nm
Load capacity of shaft	radial	200 N
	axial	100 N
Weight		approx. 0.8 kg [28.22 oz]
Protection acc. to EN 60529		IP65
Working temperature range		-40 °C [3] ... +80 °C [-40 °F [3] ... +176 °F]
Materials	shaft	stainless steel, bore tolerance H7
Shock resistance acc. to EN 60068-2-27		2000 m/s^2, 6 ms
Vibration resistance acc. to EN 60068-2-6		100 m/s^2, 10 ... 2000 Hz

Approvals

GL-approval in accordance with	letter of conformity No. 74130
UL compliant in accordance with	File no. E224618
CE compliant in accordance with	
EMC Directive	2014/30/EU
RoHS Directive	2011/65/EU
ATEX Directive	2014/34/EU (for Ex 2/22 variants)
UKCA compliant in accordance with	
EMC Regulations	S.I. 2016/1091
RoHS Regulations	S.I. 2012/3032
UKEX Regulations	S.I. 2016/1107 (for Ex 2/22 variants)

Electrical characteristics SinCos output

Output circuit	**SinCos U = 1 Vpp**	**SinCos U = 1 Vpp**
Supply voltage	5 V DC (±5 %)	10 ... 30 V DC
Power consumption (no load)	typ. 65 mA max. 110 mA	typ. 65 mA max. 110 mA
-3 dB frequency	< 180 kHz	< 180 kHz
Signal level channels A/B	1 Vpp (±20 %)	1 Vpp (±20 %)
channel 0	0.1 ... 1.2 V	0.1 .... 1.2 V
Short circuit proof outputs [4]	yes	yes
Reverse polarity protection of the supply voltage	no	yes

Electrical characteristics RS422 / Push-pull

Output circuit	**RS422** (TTL compatible)	**Push-pull**	**Push-pull** (7272 compatible)
Supply voltage	5 V DC (±5 %) 5 ... 30 V DC 10 ... 30 V DC	5 ... 30 V DC 10 ... 30 V DC	5 ... 30 V DC
Power consumption (no load)			
without inverted signal	–	typ. 55 mA/max. 125 mA	–
with inverted signal	typ. 40 mA/max. 90 mA	typ. 80 mA/max.150 mA	typ. 50 mA/max.100 mA
Permissible load / channel	max. +/- 20 mA	max. +/- 30 mA	max. +/- 20 mA
Pulse frequency	max. 300 kHz	max. 300 kHz	max. 300 kHz [5]
Signal level HIGH	min. 2.5 V	min. +V – 3 V	min. +V - 2.0 V
LOW	max. 0.5 V	max. 2.5 V	max. 0.5 V
Rising edge time t_r	max. 200 ns	max. 1 µs	max. 1 µs
Falling edge time t_f	max. 200 ns	max. 1 µs	max. 1 µs
Short circuit proof outputs [4]	yes	yes	yes
Reverse polarity protection of the supply voltage	no, 10 ... 30 V DC: yes	yes	no

1) During the run-in-phase of approx. 2 hours, reduce the limits for working temperature$_{max}$ or speed max by 1/3.
2) Depending on shaft diameter.
3) With connector: -40 °C [-40 °F], securely installed: -30 °C [-22 °F], flexibly installed: -20 °C [-4 °F].
4) If supply voltage correctly applied.
5) Max. recommended cable length 30 m [98.43'].

© Fritz Kübler GmbH, subject to errors and changes. 05/2023

Large hollow shaft robust, optical | **A02H (hollow shaft)** | **Push-pull / RS422 / SinCos**

Terminal assignment

Output circuit	Type of connection	Cable (isolate unused cores individually before initial start-up)										
1 ... D	1, A	Signal:	0 V	+V	0 Vsens	+Vsens	A	$\overline{A}$	B	$\overline{B}$	0	$\overline{0}$	⏚
		Core color:	WH	BN	GY/PK	RD/BU	GN	YE	GY	PK	BU	RD	shield

Output circuit	Type of connection	M23 connector, 12-pin										
1 ... D	2	Signal:	0 V	+V	0 Vsens	+Vsens	A	$\overline{A}$	B	$\overline{B}$	0	$\overline{0}$	⏚
		Pin:	10	12	11	2	5	6	8	1	3	4	PH [1]

Output circuit	Type of connection	M12 connector, 8-pin								
1 ... D	E	Signal:	0 V	+V	A	$\overline{A}$	B	$\overline{B}$	0	$\overline{0}$	⏚
		Pin:	1	2	3	4	5	6	7	8	PH [1]

Output circuit	Type of connection	M12 connector, 5-pin						
1 ... D	R	Signal:	0 V	+V	A	B	0	⏚
		Pin:	1	2	3	4	5	PH [1]

Output circuit	Type of connection	MIL connector, 10-pin									
1 ... D	D	Signal:	0 V	+V	A	$\overline{A}$	B	$\overline{B}$	0	$\overline{0}$	⏚
		Pin:	F	D	A	G	B	H	C	I	J

Output circuit	Type of connection	MIL connector, 7-pin						
1 ... D	K	Signal:	0 V	+V	+Vsens	A	B	0	⏚
		Pin:	F	D	E	A	B	C	J

Output circuit	Type of connection	Sub-D connector, 9-pin									
1 ... D	G	Signal:	0 V	+V	A	$\overline{A}$	B	$\overline{B}$	0	$\overline{0}$	⏚
		Pin:	1	2	3	6	4	7	5	8	PH [1]

+V: Supply voltage encoder +V DC
0 V: Supply voltage encoder ground GND (0 V)
0 V_{sens} / +V_{sens}: Using the sensor outputs of the encoder, the voltage present can be measured and if necessary increased accordingly.
A, $\overline{A}$: Incremental output channel A
B, $\overline{B}$: Incremental output channel B
0, $\overline{0}$: Reference signal
PH ⏚: Plug connector housing (shield)

Top view of mating side, male contact base

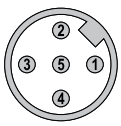

M12 connector, 5-pin

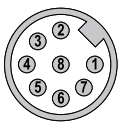

M12 connector, 8-pin

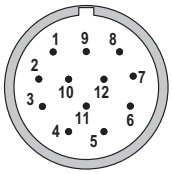

M23 connector, 12-pin

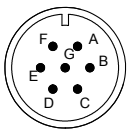

MIL connector, 7-pin

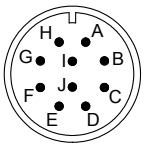

MIL connector, 10-pin

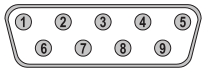

Sub-D connector, 9-pin

1) PH = shield is attached to connector housing.

© Fritz Kübler GmbH, subject to errors and changes. 05/2023

Large hollow shaft robust, optical | **A02H (hollow shaft)** | **Push-pull / RS422 / SinCos**

Dimensions hollow shaft version

Dimensions in mm [inch]

Flange without mounting aid
Flange type 1

1 Recommended torque for the clamping ring 1.0 Nm

B Cable version

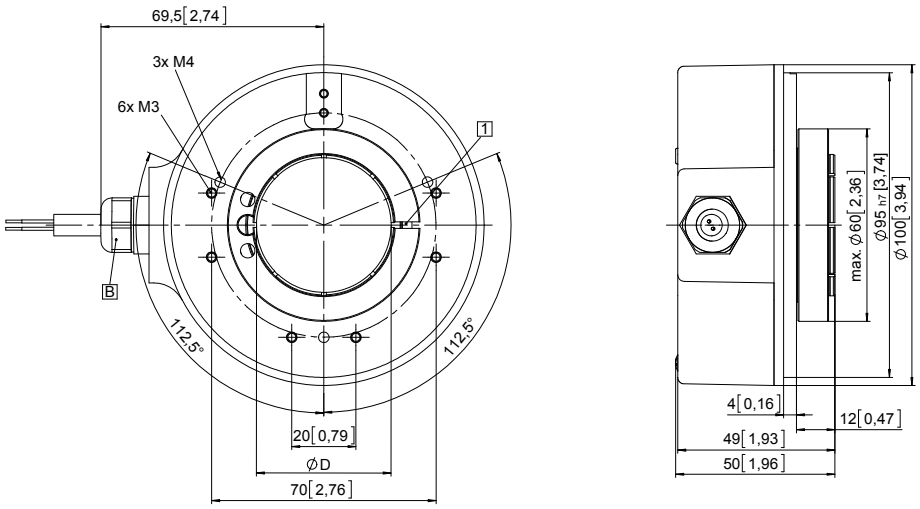

D	Fit
20 [0.79]	H7
25 [0.98]	H7
28 [1.10]	H7
30 [1.18]	H7
38 [1.50]	H7
40 [1.57]	H7
42 [1.65]	H7
5/8"	H7
1"	H7
1 1/4"	H7

Flange with spring element
Flange type 2 and 3

1 Spring element, short (flange type 2)

2 Spring element, long (flange type 3)

3 Recommended torque for the clamping ring
flange type 2: 1.0 Nm
flange type 3: 2.0 Nm

B Cable version

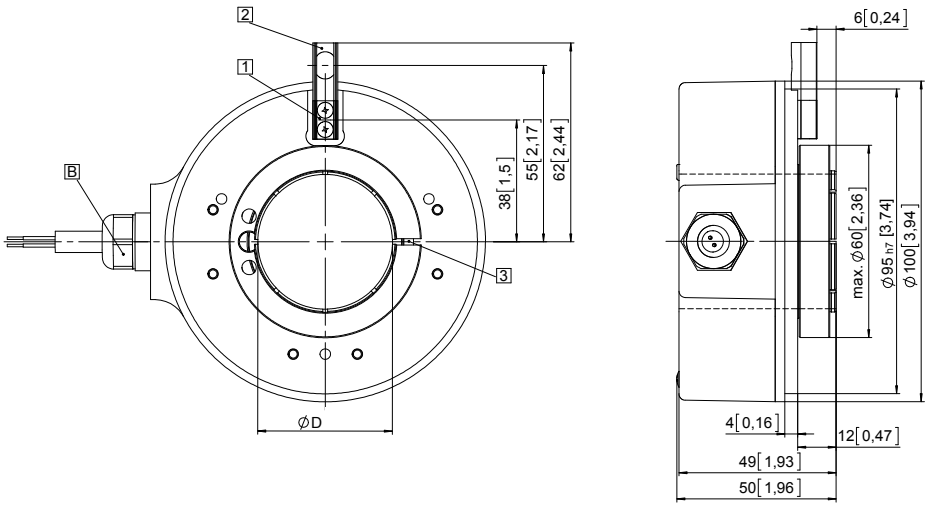

D	Fit
20 [0.79]	H7
25 [0.98]	H7
28 [1.10]	H7
30 [1.18]	H7
38 [1.50]	H7
40 [1.57]	H7
42 [1.65]	H7
5/8"	H7
1"	H7
1 1/4"	H7

Mounting using the spring element, short

When mounting the encoder, ensure that dimension L is larger than the maximum axial play of the drive in the direction of the arrow.
Danger of mechanical seizure!

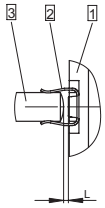

1 Flange

2 Spring element, short

3 Torque pin

Mounting using the spring element, long

Torque pin fed through the bore of the spring

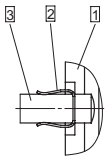

1 Flange

2 Spring element, long

3 Torque pin

© Fritz Kübler GmbH, subject to errors and changes. 05/2023

Large hollow shaft robust, optical | **A02H (hollow shaft)** | **Push-pull / RS422 / SinCos**

Dimensions hollow shaft version

Dimensions in mm [inch]

Flange with torque stop, long
Flange type 5

3 Recommended torque for the clamping ring 2.0 Nm

A Plug version

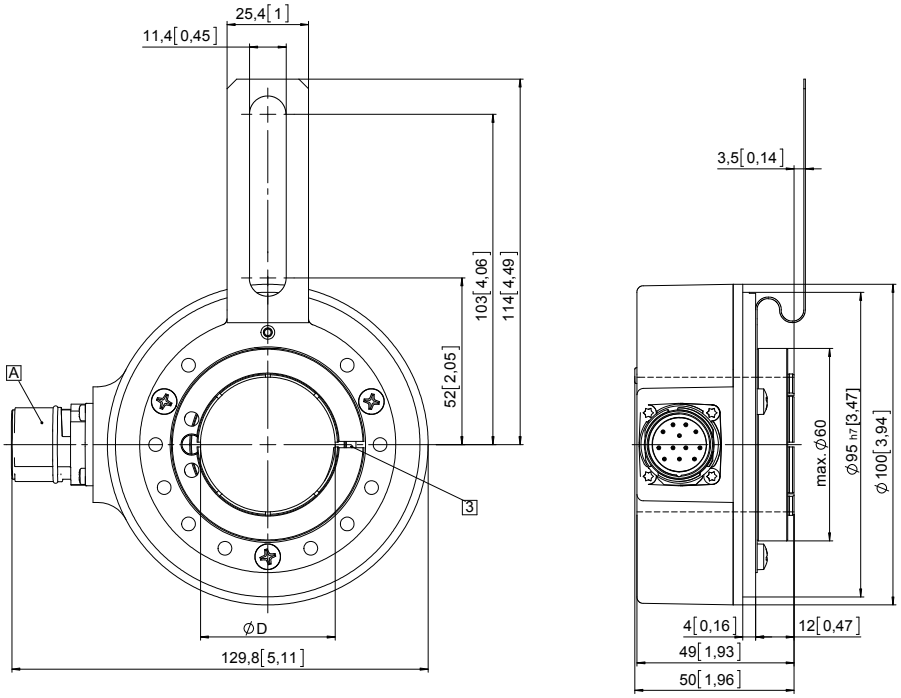

D	Fit
20 [0.79]	H7
25 [0.98]	H7
28 [1.10]	H7
30 [1.18]	H7
38 [1.50]	H7
40 [1.57]	H7
42 [1.65]	H7
5/8″	H7
1″	H7
1 1/4″	H7

Flange with torque stop, short
(Set 8.0010.4T00.0000 enclosed)
Flange type 6

3 Recommended torque for the clamping ring 2.0 Nm

A Plug version

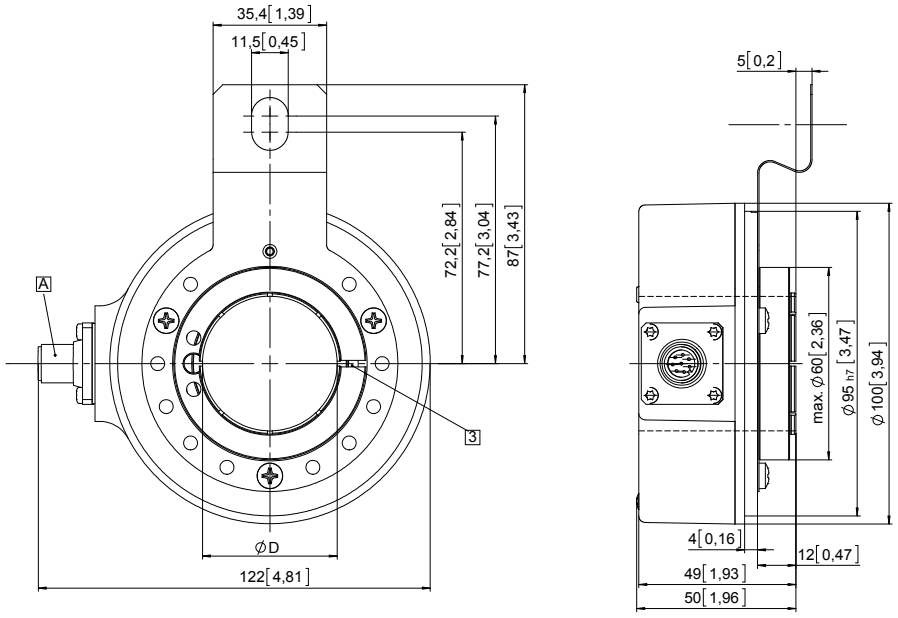

D	Fit
20 [0.79]	H7
25 [0.98]	H7
28 [1.10]	H7
30 [1.18]	H7
38 [1.50]	H7
40 [1.57]	H7
42 [1.65]	H7
5/8″	H7
1″	H7
1 1/4″	H7

© Fritz Kübler GmbH, subject to errors and changes. 05/2023