THE INFORMATION CONTAINED IN THIS DRAWING IS THE SOLE PROPERTY OF L-COM, INC. ANY REPRODUCTION IN PART OR WHOLE WITHOUT THE WRITTEN PERMISSION OF L-COM, INC. IS PROHIBITED.

REVISIONS

REV	DESCRIPTION	DATE	CHANGED BY
A	APPROVED FOR PRODUCTION	05/04/01	MCCORMICK
B	REVISED PICTORALLY ONLY	11/26/01	MCCORMICK
C	REVISED TOLERANCES (ECN 1489)	08/08/03	MCCORMICK
D	ECN 3124: UPDATE DWG FORMAT	12/19/07	D.GRIFFIN

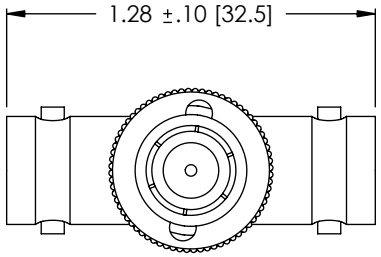

BNC PLUG

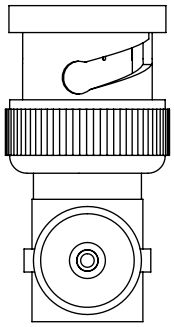

2X BNC JACK

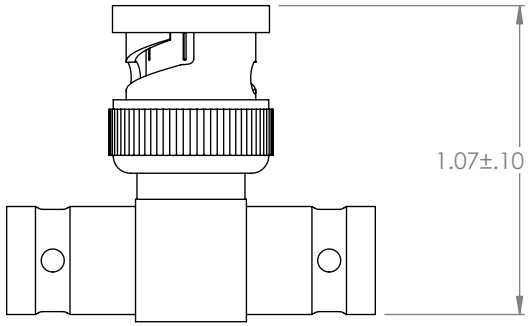

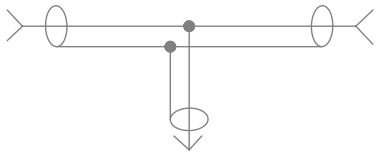

CIRCUIT DIAGRAM

SPECIFICATIONS;

MATERIALS;
SHELL: BRASS
CONTACTS: BRASS
INSULATOR: DELRIN

FINISH;
SHELL: NICKEL
CONTACT: GOLD

ELECTRICAL;
CHARACTERISTIC IMPEDANCE: 50 OHMS

RoHS Compliant ✔

UNLESS OTHERWISE SPECIFIED, DIMENSIONS ARE IN INCHES [mm]
TOLERANCES TO BE:
.X ±.1 [2.5] ANGLES ±2°
.XX ±.01 [.25]
.XXX ±.005 [.13]
OVERALL CABLE LENGTH TOL:
≤ 60 [1524] +3 [76.2] / - 0
> 60 [1524] +5% / -0%

PROJ

APPROVALS	DATE
DRAWN BY C.MCCORMICK	05/04/2001
CHECKED BY D.PARHAM	05/04/2001
APPROVED BY R.CARRICK	05/04/2001

CONFIGURATION DETAILS OF UNDIMENSIONED FEATURES MAY VARY

L-com CONNECTIVITY PRODUCTS
45 BEECHWOOD DRIVE
NORTH ANDOVER, MA
01845

CATEGORY: COAXIAL

PRODUCT DESCRIPTION: TEE ADAPTOR BNC M/F/F

SIZE	FSCM NO.	DWG. NO.	REV.
A	43321	BA250	D

SCALE: NONE | CAD FILE: BA250.SLDDRW | SHEET 1 OF 1