AC axial fans

	AC axial fan overview	143
	AC axial fans	144



AC fans

Technical information

Product line
The renowned ebm-papst AC fans are used when DC voltage is not available. The AC range of fans is based on experience gained from decades of development activity, millions of units in series production and competence in innovation of a world-wide technological leader.

A wide range of fans for AC operation is presented in this catalogue. In addition to complete device fans, you will also find fans without external housing, providing a particularly economical advantage when the air duct can be integrated in the respective device.

Variety of sizes
AC fans are available in a variety of sizes with either air exhaust or air intake over struts. Silent running models with sleeve bearings or for extreme ambient conditions; fans with ball bearings are available with plug connection or external leads.

Shaded-pole or capacitor motors
Fan drives by shaded-pole or capacitor motors, most of which incorporate the world-famous ebm-papst external rotor principle: The fan blades are directly attached to the external rotor of the external rotor motor, thus combining both high performance and profitability.

Flat built AC fans
ebm-papst also has particularly flat built AC fans with internal rotor motor. Their advantage: quick start to full speed. A plastic impeller and the both smaller and lighter internal rotor motor lead to a lower moment of inertia.

Bearings
AC fans with sleeve bearings are powered by Class E insulated motors. Fans with ball bearings are equipped with Class B, E or F insulated motors.

Protection class
All ebm-papst fans conform to the requirements of IP 20. Fans conforming to IP 54 and special types of protection class are also available.

AC voltage
The line of AC fans for Euro voltage according to IEC 60038 (230 V + 6 %, -10 %) is basically also available for 115 V.

Frequencies
AC fans can be operated at frequencies of 50 Hz or 60 Hz. However, their technical data then changes accordingly.

Capacitor
Fans driven by capacitor external motors provide particularly high operating efficiency. Generally, the required operating capacitor is already integrated in the fan housing.

Overloading
Almost all AC fans are protected against overloading (e.g. due to locked rotor) the drive motors are either impedance protected (marked “Impedance protected”, and/or “Z.P.”) or are equipped with a thermal switch (marked “Thermally protected” or “Th.P.”). The model designation of these fans ends with “S”.

Axial fans for AC operation

Overview of air performance

Dimension	Series	Air flow	Page
mm		m^3/h	
□ 80 x 38	8000 A	29...57	144
□ 80 x 38	8000 N	30...61	145
Ø 76 x 37	8000 TA	23...45	146
Ø 76 x 37	8000 TV	24...47	147
□ 92 x 25	3900	31...70	148
□ 92 x 38	3000	49...89	149
□ 119 x 25	9900	84...135	150
□ 119 x 38	4000 N	80...180	151
□ 119 x 38	4000 Z	100...180	152
Ø 113 x 37	4600 TA	138...147	153
Ø 108 x 37	4600 TZ	125...140	154
□ 127 x 38	5900	150...206	155
□ 135 x 38	5600	235...270	156
150 x 172 x 38	7000	330...390	157
Ø 150 x 55	7800	325...380	158
Ø 150 x 55	7400	390...445	159
Ø 172 x 51	6000	375...500	160
Ø 225 x 80	W**200	450...1030	161
□ 280 x 80	W2E 250	1865	162

Overview of technically feasible designs

Axial fans								
Series	mm	VDE, UL, CSA	Sintec sleeve bearings/ ball bearings	OPTIONAL Speed sensor	Humidity protection	IP >= IP54	Salt spray fog protection	P.
8000 A	80 x 80 x 38	yes	□/■	–	•	•	•	144
8000 N	80 x 80 x 38	yes	□/■	–	•	•	•	145
8000 TA	76 Ø x 37	yes	□/■	–	•	•	•	146
8000 TV	76 Ø x 37	yes	□/■	–	•	•	•	147
3900	92 x 92 x 25	yes	□/■	–	•	–	–	148
3000	92 x 92 x 38	yes	□/■	–	•	•	•	149
9900	119 x 119 x 25	yes	□/■	–	•	–	–	150
4000 N	119 x 119 x 38	yes	□/■	•	•	•	•	151
4000 Z	119 x 119 x 38	yes	□/■	•	•	•	•	152
4600 TA	113 Ø x 37	yes	□/■	–	•	•	•	153
4600 TZ	108 Ø x 37	yes	□/■	–	•	•	•	154
5900	127 x 127 x 38	yes	□/■	–	•	–	–	155
5600	135 x 135 x 38	yes	■	–	•	•	•	156
7000	150 x 172 x 38	yes	■	–	–	–	–	157
7800	150 Ø x 55	yes	■	•	–	–	–	158
7400	150 Ø x 55	yes	■	–	–	–	–	159
6000	172 ¯ x 51	yes	■	–	–	–	–	160

• available – not yet available □ Sleeve bearings ■ Ball bearings

Information on pictograms

On the pages of the catalogue and on the following overview pages, the pictograms illustrated below provide information about technically possible special versions in the fan line presented.

Please note that these special versions are not possible for all voltages and speeds, and not in all combinations.

The special versions are designed for specific customers and projects and are not usually available off the shelf.

Speed signal

The fan uses a separate wire to output information about its speed, and thus about the speed of the rotor. For technical details, please refer to page 110.

Protection against moisture

Protection for the fan's electronics against moisture and condensation. For technical details, please refer to page 123.

IP 54

Protection of motor and PCB board against splashed water and humidity. For technical details, please refer to page 123.

Protection against salt spray fog

Protection of fan against the damaging effects of salt spray fog. For technical details, please refer to page 123.

max. 57 m^3/h

AC axial fans

Series 8000 A 80 x 80 x 38 mm

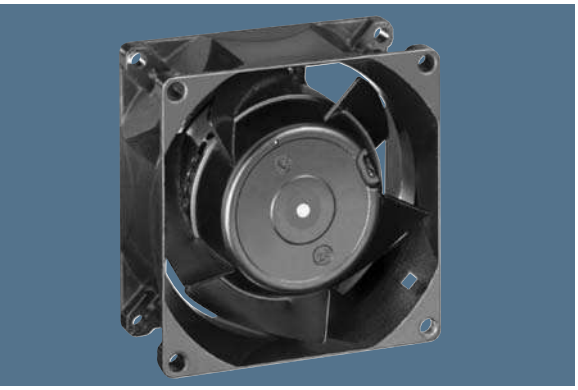

- AC fans with external rotor shaded-pole motor. Impedance protected against overloading.
- Metal fan housing and impeller.
- Air intake over struts. Direction of rotation clockwise, seen on rotor.
- Electrical connection via 2 flat plugs 2.8 x 0.5 mm.
- Fan housing with grounding lug and screw M4 x 8 (TORX).
- Mass: 490 g.
- Optionally available with electrical connection via leads.
- Optionally available with air exhaust over struts and clockwise direction of rotation.
- Please note our new ACmaxx series. With identical mounting dimensions and voltages, this series achieves higher energy efficiency.

Nominal data	Air flow	Air flow	Nominal voltage	Frequency	Sound pressure level	Sound power level	Sintec sleeve bearings / Ball bearings	Power input	Nominal speed	Temperature range	Service life L_{10} at 40 °C at T max	Curve
Type	**m^3/h**	**CFM**	**V**	**Hz**	**dB(A)**	**Bel(A)**	**□ / ■**	**Watts**	**RPM**	**°C**	**Hours Hours**	
8880 A	29	17,1	**230**	**50**	26	4,1	□	9,0	1 750	-10...+80	60 000 / 25 000	1
8850 A	36	21,2	**230**	**50**	31	4,6	□	12,5	2 150	-10...+70	52 500 / 25 000	2
8550 A	48	28,3	**230**	**50**	36	5,0	□	12,0	2 700	-10...+70	52 500 / 25 000	3
8556 A	48	28,3	**230**	**50**	37	5,1	■	12,0	2 800	-40...+90	52 500 / 15 000	3
8830 A	34	20,0	**115**	**60**	29	4,3	□	8,0	1 950	-10...+80	62 500 / 25 000	4
8800 A	45	26,5	**115**	**60**	34	4,8	□	11,0	2 500	-10...+70	55 000 / 27 500	5
8500 A	57	33,5	**115**	**60**	41	5,5	□	11,0	3 200	-10...+75	55 000 / 25 000	6
8506 A	57	33,5	**115**	**60**	42	5,7	■	11,0	3 300	-40...+95	55 000 / 15 000	6

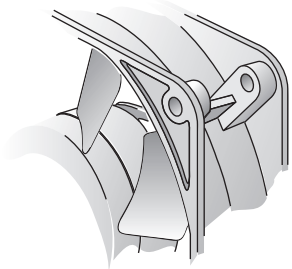

Series 8000 A with reinforced flanges

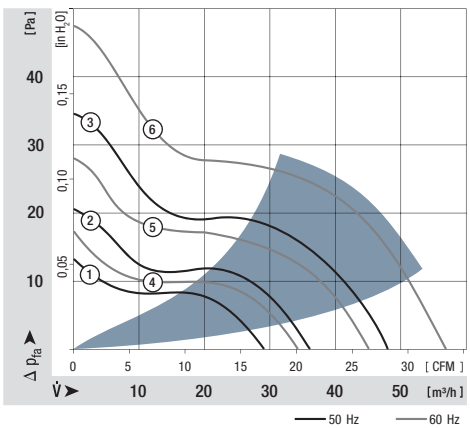

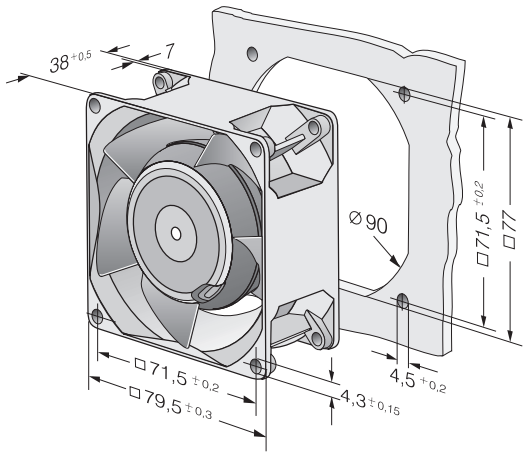

HP IP54 SP

ebmpapst

max. 61 m^3/h

AC axial fans

Series 8000 N 80 x 80 x 38 mm

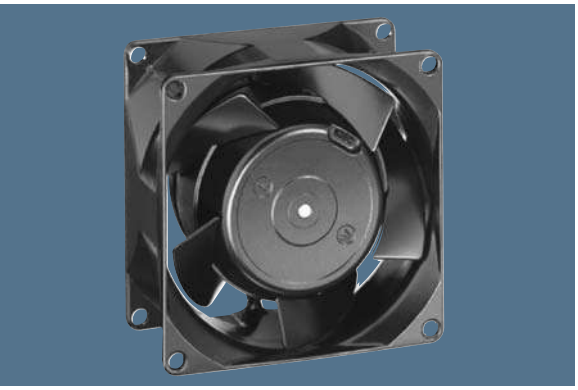

- AC fans with external rotor shaded-pole motor. Impedance protected against overloading.
- Metal fan housing and impeller.
- Air exhaust over struts. Direction of rotation clockwise, seen on rotor.
- Electrical connection via 2 leads. Bared and tin-plated.
- Fan housing with grounding lug for screw M4 x 8 (TORX).
- Mass: 490 g.
- Please note our new ACmaxx series. With identical mounting dimensions and voltages, this series achieves higher energy efficiency.

Nominal data	Air flow	Air flow	Nominal voltage	Frequency	Sound pressure level	Sound power level	Sintec sleeve bearings / Ball bearings	Power input	Nominal speed	Temperature range	Service life L_{10} at 40 °C at T_{max}	Curve
Type	**m^3/h**	**CFM**	**V**	**Hz**	**dB(A)**	**Bel(A)**	□ / ■	**Watts**	**RPM**	**°C**	**Hours Hours**	
8880 N	30	17,7	**230**	**50**	18	3,3	□	9,0	1 750	-10...+80	60 000 / 25 000	1
8850 N	37	21,8	**230**	**50**	24	3,9	□	12,5	2 150	-10...+70	52 500 / 25 000	2
8550 N	50	29,4	**230**	**50**	30	4,4	□	12,0	2 700	-10...+70	52 500 / 25 000	3
8556 N	50	29,4	**230**	**50**	31	4,5	■	12,0	2 800	-40...+90	52 500 / 15 000	3
8830 N	36	21,2	**115**	**60**	21	3,7	□	8,0	1 950	-10...+80	62 500 / 25 000	4
8800 N	47	27,7	**115**	**60**	28	4,3	□	11,0	2 500	-10...+70	55 000 / 27 500	5
8500 N	61	35,9	**115**	**60**	34	4,8	□	11,0	3 200	-10...+75	55 000 / 25 000	6
8506 N	61	35,9	**115**	**60**	35	5,0	■	11,0	3 300	-40...+95	55 000 / 15 000	6

Fan type				Lead wires	
8830 N	8800 N	8550 N	8500 N	310 mm long	AWG 18, TR 64
8880 N				310 mm long	AWG 18, TR 64
8556 N	8506 N			310 mm long	AWG 22
8850 N				440 mm long	AWG 18, TR 64

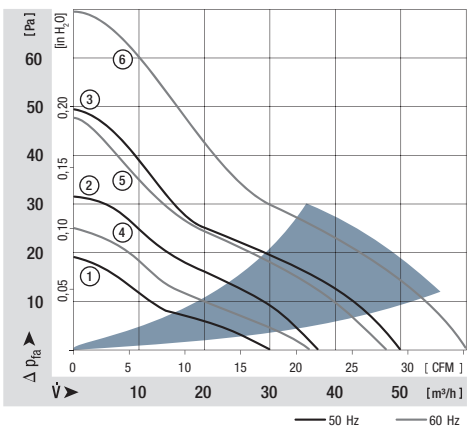

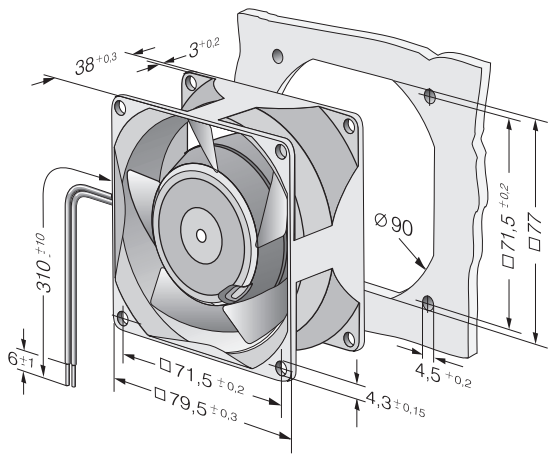

max. 45 m^3/h

AC axial fans

Series 8000 TA 76 Ø x 37 mm

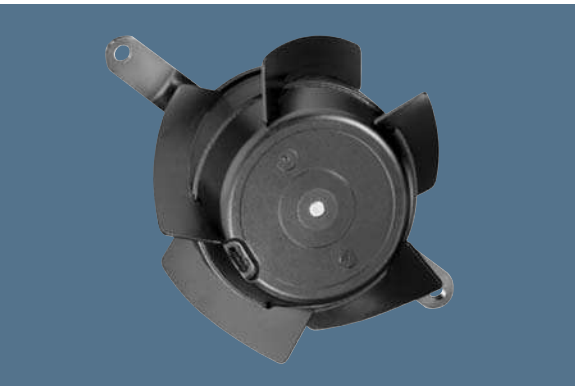

- AC fans with external rotor shaded-pole motor. Impedance protected against overloading.
- Impeller and mounting bracket of metal.
- Air intake over mounting bracket. Direction of rotation clockwise, seen on rotor.
- Electrical connection via 2 leads. Bared and tin-plated.
- Mass: 370 g.
- Please note our new ACmaxx series. With identical mounting dimensions and voltages, this series achieves higher energy efficiency.

Nominal data	Air flow	Air flow	Nominal voltage	Frequency	Sound pressure level	Sintec sleeve bearings / Ball bearings	Power input	Nominal speed	Temperature range	Service life L_{10} at 40 °C	at T max	Curve
Type	**m^3/h**	**CFM**	**V**	**Hz**	**dB(A)**	**□ / ■**	**Watts**	**RPM**	**°C**	**Hours**	**Hours**	
8880 TA	23	13,5	**230**	**50**	15	□	9,0	1 650	-10...+80	60 000	25 000	–
8850 TA	30	17,7	**230**	**50**	19	□	12,0	2 100	-10...+70	52 500	25 000	–
8550 TA	38	22,4	**230**	**50**	25	□	12,0	2 650	-10...+70	52 500	25 000	–
8556 TA	38	22,4	**230**	**50**	26	■	12,0	2 750	-40...+90	52 500	15 000	–
8830 TA	26	15,3	**115**	**60**	18	□	8,0	1 850	-10...+80	62 500	25 000	–
8800 TA	34	20,0	**115**	**60**	23	□	11,0	2 450	-10...+70	55 000	27 500	–
8500 TA	45	26,5	**115**	**60**	30	□	11,0	3 150	-10...+75	55 000	25 000	–
8506 TA	45	26,5	**115**	**60**	31	■	11,0	3 250	-40...+95	55 000	15 000	–

The air flow and noise level of fans without external housing depends on the installation conditions. The stated air flow and noise has been measured with an orifice 76.5 mm Ø at a distance of approx. 17 mm from the mounting bracket. Under exceptionally favourable mounting conditions, the air flow of fan series 8000 A is achievable. The noise in the optimal operating range can only be measured for these fans in a specific application.

Fan type				Lead wires	
8880 TA	8850 TA	8830 TA	8800 TA	325 mm long	AWG 18, TR 64
8550 TA	8500 TA			325 mm long	AWG 18, TR 64
8556 TA	8506 TA			325 mm long	AWG 18

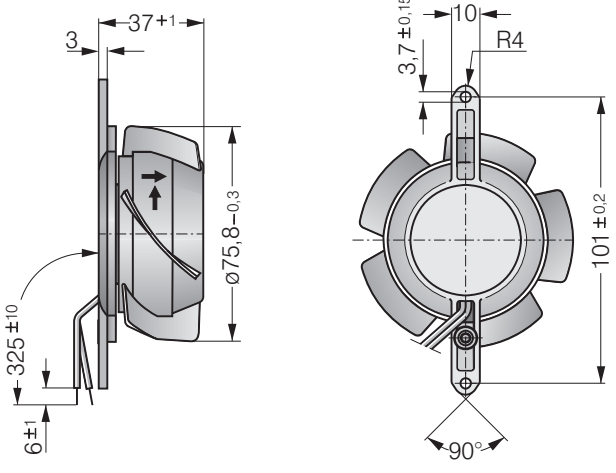

HP IP54 SP

ebmpapst

max. 47 m^3/h

AC axial fans

Series 8000 TV 76 Ø x 37 mm

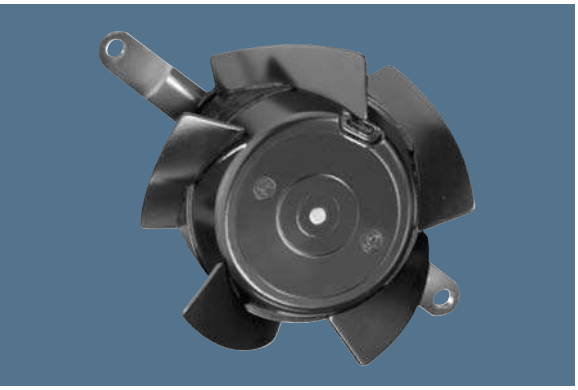

- AC fans with external rotor shaded-pole motor. Impedance protected against overloading.
- Impeller and mounting bracket of metal.
- Air exhaust over mounting bracket. Direction of rotation clockwise, seen on rotor.
- Electrical connection via 2 leads. Bared and tin-plated.
- Mass: 370 g.
- Please note our new ACmaxx series. With identical mounting dimensions and voltages, this series achieves higher energy efficiency.

Nominal data	Air flow	Air flow	Nominal voltage	Frequency	Sound pressure level	Sintec sleeve bearings / Ball bearings	Power input	Nominal speed	Temperature range	Service life L_{10} at 40 °C	at T_{max}	Curve
Type	**m^3/h**	**CFM**	**V**	**Hz**	**dB(A)**	**□ / ■**	**Watts**	**RPM**	**°C**	**Hours**	**Hours**	
8880 TV	24	14,1	**230**	**50**	15	□	9,0	1 650	-10...+80	60 000 / 25 000		–
8850 TV	31	18,2	**230**	**50**	20	□	12,0	2 100	-10...+70	52 500 / 25 000		–
8550 TV	40	23,5	**230**	**50**	27	□	12,0	2 650	-10...+70	52 500 / 25 000		–
8556 TV	40	23,5	**230**	**50**	28	■	12,0	2 750	-40...+90	52 500 / 15 000		–
8830 TV	27	15,9	**115**	**60**	18	□	8,0	1 850	-10...+80	62 500 / 25 000		–
8800 TV	36	21,2	**115**	**60**	24	□	11,0	2 450	-10...+70	55 000 / 27 500		–
8500 TV	47	27,7	**115**	**60**	32	□	11,0	3 150	-10...+75	55 000 / 25 000		–
8506 TV	47	27,7	**115**	**60**	33	■	11,0	3 250	-40...+95	55 000 / 15 000		–

The air flow and noise level of fans without external housing depends on the installation conditions. The stated air flow and noise has been measured with an orifice 76.5 mm Ø at a distance of approx. 17 mm from the mounting bracket. Under exceptionally favourable mounting conditions, the air flow of fan series 8000 N is achievable. The noise in the optimal operating range can only be measured for these fans in a specific application.

Fan type				Lead wires	
8880 TV	8850 TV	8830 TV	8800 TV	325 mm long	AWG 18, TR 64
8550 TV	8500 TV			325 mm long	AWG 18, TR 64
8556 TV	8506 TV			325 mm long	AWG 18

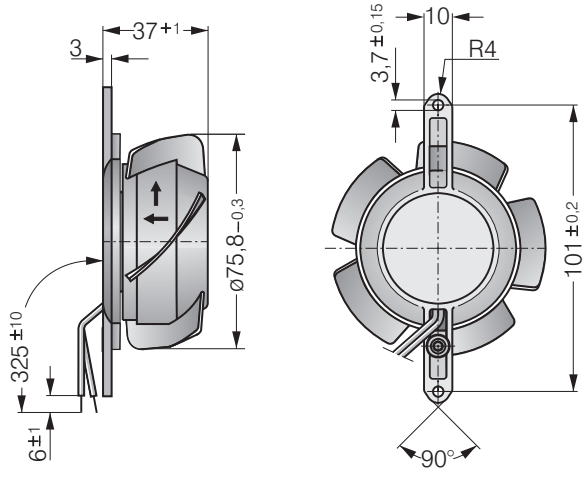

max. 70 m^3/h

AC axial fans

Series 3900 92 x 92 x 25 mm



- AC fans with internal rotor shaded-pole motor. Impedance protected against overloading.
- Metal fan housing, impeller of mineral-reinforced plastic PA.
- Air exhaust over struts. Direction of rotation counter-clockwise, seen on rotor.
- Electrical connection via 2 flat plugs 2.8 x 0.5 mm.
- Fan housing with grounding lug for screw M4.
- Mass: 280 g.
- Please note our new ACmaxx series. With identical mounting dimensions and voltages, this series achieves higher energy efficiency.

Nominal data	Air flow	Air flow	Nominal voltage	Frequency	Sound pressure level	Sound power level	Sintec sleeve bearings / Ball bearings	Power input	Nominal speed	Temperature range	Service life L_{10} at 40 °C	at T max	Curve
Type	**m^3/h**	**CFM**	**V**	**Hz**	**dB(A)**	**Bel(A)**	□ / ■	**Watts**	**RPM**	**°C**	**Hours**	**Hours**	
3950 L	31	18,2	**230**	**50**	24	3,8	□	6,0	1 550	-10...+80	70 000 / 27 500		1
3956 L	31	18,2	**230**	**50**	24	3,8	■	6,0	1 550	-40...+80	70 000 / 27 500		1
3950 M	45	26,5	**230**	**50**	29	4,2	□	6,0	2 150	-10...+80	70 000 / 27 500		2
3956 M	45	26,5	**230**	**50**	29	4,2	■	6,0	2 150	-40...+80	70 000 / 27 500		2
3950	59	34,7	**230**	**50**	35	4,7	□	11,0	2 650	-20...+80	55 000 / 20 000		3
3956	59	34,7	**230**	**50**	35	4,7	■	11,0	2 650	-40...+80	55 000 / 20 000		3
3900 L	39	23,0	**115**	**60**	27	4,0	□	5,0	1 850	-10...+80	70 000 / 27 500		4
3906 L	39	23,0	**115**	**60**	27	4,0	■	5,0	1 850	-40...+80	70 000 / 27 500		4
3900 M	53	31,2	**115**	**60**	34	4,6	□	5,0	2 600	-10...+80	70 000 / 27 500		5
3906 M	53	31,2	**115**	**60**	34	4,6	■	5,0	2 600	-40...+80	70 000 / 27 500		5
3900	70	41,2	**115**	**60**	40	5,1	□	9,0	3 150	-20...+80	60 000 / 22 500		6
3906	70	41,2	**115**	**60**	40	5,1	■	9,0	3 150	-40...+80	60 000 / 22 500		6

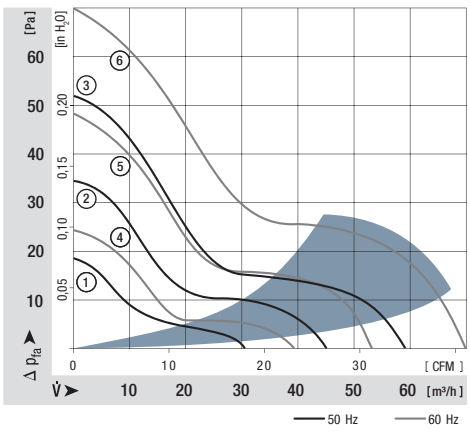

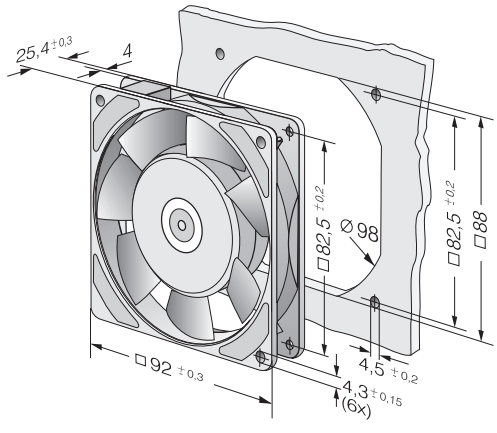

ebmpapst

max. 89 m^3/h

AC axial fans

Series 3000 92 x 92 x 38 mm

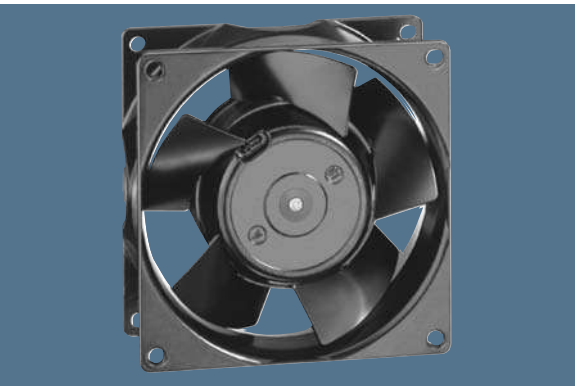

- AC fans with external rotor shaded-pole motor. Impedance protected against overloading.
- Metal fan housing and impeller.
- Air exhaust over struts. Rotational direction CW looking at rotor.
- Electrical connection via 2 leads. Bared and tin-plated.
- Fan housing with grounding lug and screw M4 x 8 (TORX).
- Mass: 420 g.
- Please note our new ACmaxx series. With identical mounting dimensions and voltages, this series achieves higher energy efficiency.

Nominal data	Air flow	Air flow	Nominal voltage	Frequency	Sound pressure level	Sound power level	Sintec sleeve bearings □ / Ball bearings ■	Power input	Nominal speed	Temperature range	Service life L_{10} at 40 °C at T_{max}		Curve
Type	m^3/h	CFM	V	Hz	dB(A)	Bel(A)	□ / ■	Watts	RPM	°C	Hours	Hours	
3850	49	28,8	**230**	**50**	24	3,7	□	9,0	1 750	-10...+75	60 000	/ 27 500	1
3856	54	31,8	**230**	**50**	26	3,9	■	9,0	1 950	-40...+90	60 000	/ 20 000	2
3550	67	39,4	**230**	**50**	32	4,4	□	8,5	2 300	-10...+80	60 000	/ 25 000	3
3556	67	39,4	**230**	**50**	33	4,5	■	8,5	2 400	-40...+90	60 000	/ 20 000	3
3650	75	44,1	**230**	**50**	36	4,8	□	12,0	2 650	-10...+55	52 500	/ 37 500	4
3656	75	44,1	**230**	**50**	37	4,9	■	12,0	2 700	-40...+75	52 500	/ 22 500	4
3800	54	31,8	**115**	**60**	26	3,9	□	8,0	1 900	-10...+80	62 500	/ 25 000	5
3806	60	35,3	**115**	**60**	29	4,2	■	8,0	2 150	-40...+95	62 500	/ 17 500	6
3500	73	43,0	**115**	**60**	35	4,6	□	8,0	2 500	-10...+80	62 500	/ 25 000	7
3506	73	43,0	**115**	**60**	36	4,7	■	8,0	2 600	-40...+95	62 500	/ 17 500	7
3600	89	52,4	**115**	**60**	41	5,1	□	11,0	3 100	-10...+65	55 000	/ 30 000	8
3606	89	52,4	**115**	**60**	42	5,2	■	11,0	3 200	-40...+75	55 000	/ 25 000	8

Fan type	Lead wires	
With sleeve bearings	310 mm long	AWG 18, TR 64
With ball bearings	310 mm long	AWG 18

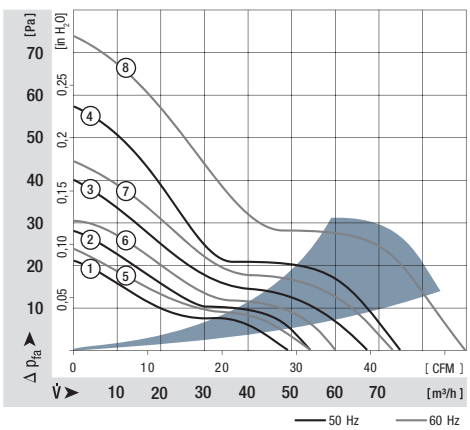

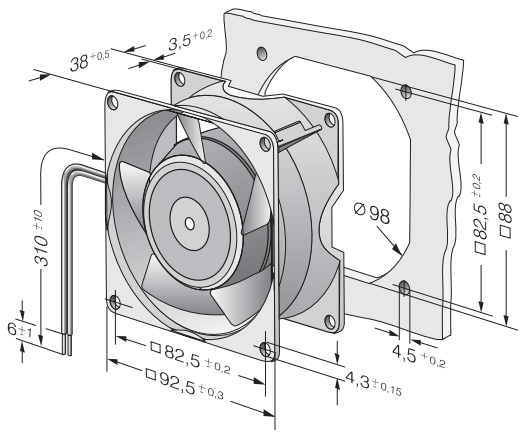

HP IP54 SP

max. 135 m^3/h

AC axial fans

Series 9900 119 x 119 x 25 mm



- AC fans with external rotor shaded-pole motor.
  Protected against overloading by thermal cut-out.
- Metal fan housing and impeller.
- Air exhaust over struts. Direction of rotation counter-clockwise, seen on rotor.
- Electrical connection via 2 flat plugs 2.8 x 0.5 mm.
- Fan housing with grounding lug and screw M4 x 8 (TORX).
- Mass: 320 g.
- Please note our new ACmaxx series. With identical mounting dimensions and voltages, this series achieves higher energy efficiency.

Nominal data	Air flow	Air flow	Nominal voltage	Frequency	Sound pressure level	Sound power level	Sintec sleeve bearings / Ball bearings	Power input	Nominal speed	Temperature range	Service life L_{10} at 40 °C	at T_{max}	Curve
Type	**m^3/h**	**CFM**	**V**	**Hz**	**dB(A)**	**Bel(A)**	□ / ■	**Watts**	**RPM**	**°C**	**Hours**	**Hours**	
9956 L	84	49,4	**230**	**50**	29	4,4	■	9,5	1850	-40...+80	57 500 / 22 500		1
9956 M	104	61,2	**230**	**50**	35	4,7	■	10,0	2250	-40...+80	57 500 / 22 500		2
9950	117	68,9	**230**	**50**	37	5,0	□	14,0	2450	-20...+70	47 500 / 22 500		3
9956	117	68,9	**230**	**50**	37	5,0	■	14,0	2450	-40...+70	47 500 / 22 500		3
9906 L	100	58,9	**115**	**60**	34	4,6	■	8,0	2100	-40...+80	62 500 / 25 000		4
9906 M	111	65,3	**115**	**60**	37	5,0	■	8,0	2450	-40...+80	62 500 / 25 000		5
9900	135	79,5	**115**	**60**	42	5,4	□	12,0	2850	-20...+70	52 500 / 25 000		6
9906	135	79,5	**115**	**60**	42	5,4	■	12,0	2850	-40...+70	52 500 / 25 000		6

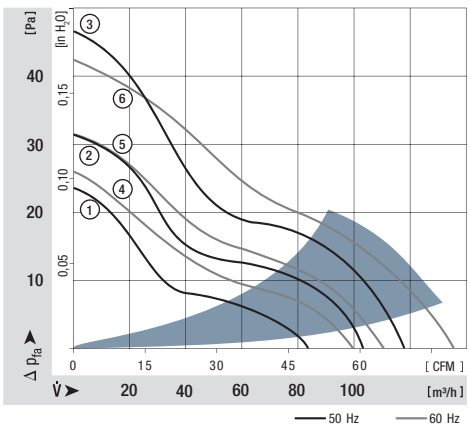

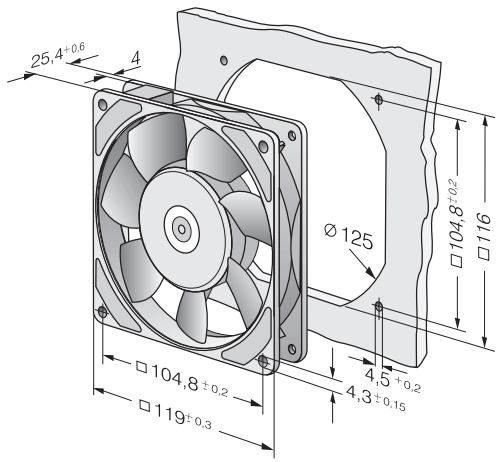

ebmpapst

max. 180 m³/h

AC axial fans

Series 4000 N 119 x 119 x 38 mm

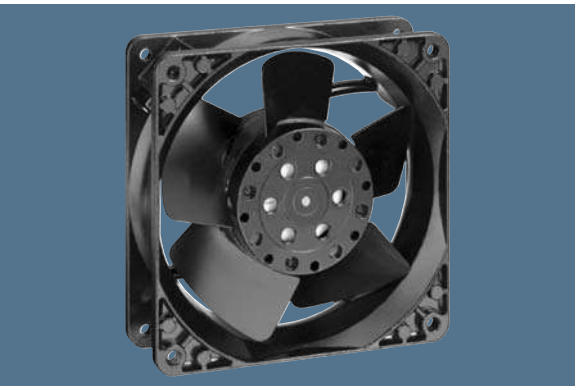

- AC fans with external rotor shaded-pole motor. Impedance protected against overloading.
- Metal fan housing and impeller
- Air intake over struts. Direction of rotation clockwise, seen on rotor.
  Types 4890 N and 4840 N air exhaust over struts.
- Electrical connection via 2 flat plugs 3.0 x 0.5 mm.
- Impeller with 3 or 5 blades, see note for fan type.
- Optionally available: Models with reinforced flanges and single leads.
- Fan housing with grounding lug for screw M 4 and UNC.
- Mass: 550 g.
- Please note our new ACmaxx series. With identical mounting dimensions and voltages, this series achieves higher energy efficiency.

Nominal data	Air flow	Air flow	Nominal voltage	Frequency	Sound pressure level	Sound power level	Sintec sleeve bearings / Ball bearings	Power input	Nominal speed	Temperature range	Service life L_{10} at 40 °C at T max	Curve
Type	**m³/h**	**CFM**	**V**	**Hz**	**dB(A)**	**Bel(A)**	□ / ■	**Watts**	**RPM**	**°C**	**Hours** **Hours**	
4890 N	80	47,1	**230**	**50**	25	4,0	□	11,0	1 550	-10...+70	55 000 / 27 500	1
4850 N*	100	58,9	**230**	**50**	32	4,4	□	10,0	1 800	-10...+70	57 500 / 27 500	2
4580 N*	123	72,4	**230**	**50**	41	5,2	□	18,0	2 350	-10...+55	40 000 / 27 500	3
4550 N*	145	85,3	**230**	**50**	44	5,4	□	16,5	2 550	-10...+55	42 500 / 30 000	4
4650 N	160	94,2	**230**	**50**	46	5,4	□	19,0	2 650	-10...+55	37 500 / 27 500	5
4656 N	160	94,2	**230**	**50**	47	5,5	■	19,0	2 650	-40...+85	37 500 / 15 000	5
4840 N	85	50,0	**115**	**60**	26	4,1	□	10,0	1 650	-10...+75	57 500 / 25 000	6
4800 N*	97	57,1	**115**	**60**	32	4,3	□	9,0	1 750	-10...+75	60 000 / 27 500	7
4530 N*	151	88,9	**115**	**60**	45	5,4	□	16,0	2 700	-10...+65	42 500 / 25 000	8
4500 N*	169	99,5	**115**	**60**	48	5,7	□	15,0	3 000	-10...+65	47 500 / 25 000	9
4600 N	180	105,9	**115**	**60**	50	5,7	□	18,0	3 100	-10...+60	40 000 / 25 000	10
4606 N	180	105,9	**115**	**60**	51	5,8	■	18,0	3 100	-40...+90	40 000 / 15 000	10

230 V and 115 V versions are rated for both 50 Hz and 60 Hz operation.
For 60 Hz data, please refer to the corresponding 115 V 60 Hz model,
for 50 Hz data please refer to the corresponding 230 V 50 Hz model.

* Fan with 3 blades.

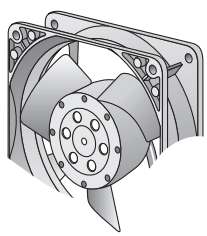

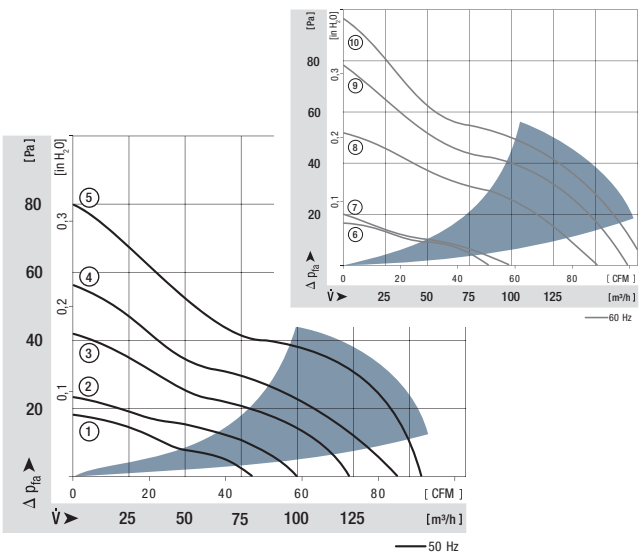

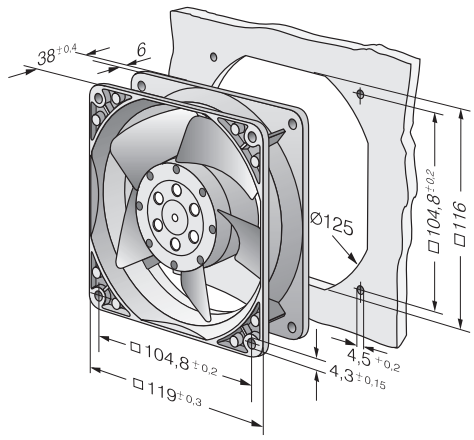

max. 180 m^3/h

AC axial fans

Series 4000 Z 119 x 119 x 38 mm



- AC fans with external rotor shaded-pole motor. Impedance protected against overloading.
- Metal fan housing and impeller.
- Air exhaust over struts. Direction of rotation clockwise, seen on rotor.
- Electrical connection via 2 flat plugs 2.8 x 0.5 mm.
- Optionally available: Models with reinforced flanges and single leads.
- Fan housing with grounding lug and screw M4 x 8 (TORX).
- Mass: 540 g.
- Please note our new ACmaxx series. With identical mounting dimensions and voltages, this series achieves higher energy efficiency.

Nominal data	Air flow	Air flow	Nominal voltage	Frequency	Sound pressure level	Sound power level	Sintec sleeve bearings / Ball bearings	Power input	Nominal speed	Temperature range	Service life L_{10} at 40 °C	at T max	Curve
Type	**m^3/h**	**CFM**	**V**	**Hz**	**dB(A)**	**Bel(A)**	□ / ■	**Watts**	**RPM**	**°C**	**Hours**	**Hours**	
4850 Z	100	58,9	**230**	**50**	26	4,0	□	13,0	1 700	-10...+65	50 000	/ 27 500	1
4856 Z	100	58,9	**230**	**50**	26	4,0	■	13,0	1 700	-40...+75	50 000	/ 20 000	1
4580 Z	115	67,7	**230**	**50**	30	4,3	□	13,0	1 900	-10...+65	50 000	/ 27 500	2
4586 Z	115	67,7	**230**	**50**	30	4,3	■	13,0	1 900	-40...+75	50 000	/ 20 000	2
4650 Z	160	94,2	**230**	**50**	40	5,3	□	19,0	2 650	-10...+50	37 500	/ 30 000	3
4656 Z	160	94,2	**230**	**50**	40	5,3	■	19,0	2 650	-40...+75	37 500	/ 17 500	3
4800 Z	105	61,6	**115**	**60**	28	4,1	□	12,0	1 800	-10...+70	52 500	/ 25 000	4
4806 Z	105	61,6	**115**	**60**	28	4,1	■	12,0	1 800	-40...+75	52 500	/ 17 500	4
4530 Z	120	70,6	**115**	**60**	32	4,4	□	12,0	2 000	-10...+70	52 500	/ 25 000	5
4536 Z	120	70,6	**115**	**60**	32	4,4	■	12,0	2 000	-40...+75	52 500	/ 17 500	5
4600 Z	180	105,9	**115**	**60**	45	5,6	□	18,0	3 100	-10...+60	40 000	/ 25 000	6
4606 Z	180	105,9	**115**	**60**	45	5,6	■	18,0	3 100	-40...+85	40 000	/ 15 000	6

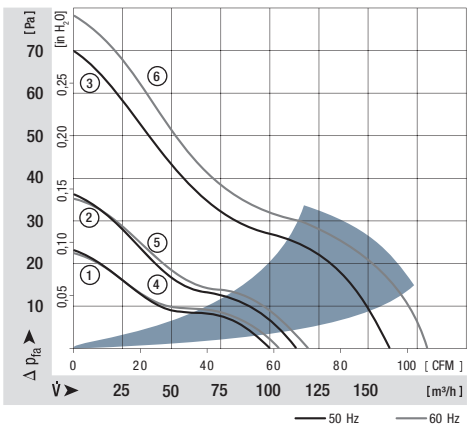

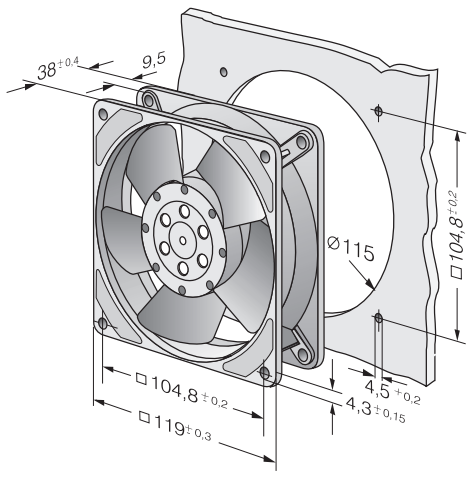

HP IP54 SP

ebmpapst

max. 147 m^3/h

AC axial fans

Series 4600 TA 113 Ø x 37 mm

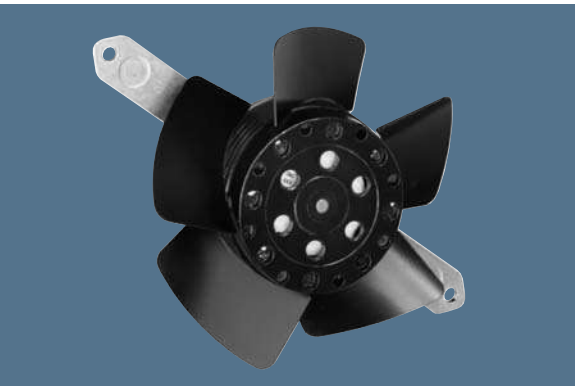

- AC fans with external rotor shaded-pole motor. Impedance protected against overloading.
- Impeller and mounting bracket of metal.
- Air intake over mounting bracket. Direction of rotation clockwise, seen on rotor.
- Electrical connection via 2 leads. Bared and tin-plated.
- Mass: 430 g.
- Please note our new ACmaxx series. With identical mounting dimensions and voltages, this series achieves higher energy efficiency.

Nominal data	Air flow	Air flow	Nominal voltage	Frequency	Sound pressure level	Sintec sleeve bearings / Ball bearings	Power input	Nominal speed	Temperature range	Service life L_{10} at 40 °C at T_{max}	Curve
Type	**m^3/h**	**CFM**	**V**	**Hz**	**dB(A)**	**□ / ■**	**Watts**	**RPM**	**°C**	**Hours Hours**	
4650 TA	138	81,2	**230**	**50**	41	□	19,0	2 550	-10...+45	37 500 / 32 500	–
4656 TA	138	81,2	**230**	**50**	42	■	19,0	2 550	-40...+75	37 500 / 17 500	–
4600 TA	147	86,5	**115**	**60**	43	□	18,0	2 900	-10...+50	40 000 / 32 500	–
4606 TA	147	86,5	**115**	**60**	44	■	18,0	2 900	-40...+80	40 000 / 17 500	–

The air flow and noise level of fans without external housing depends on the installation conditions. The stated air flow and noise has been measured with an orifice 109 mm Ø at a distance of approx. 17 mm from the mounting bracket. Under exceptionally favourable mounting conditions, the air flow of fan series 4600 N is achievable. The noise in the optimal operating range can only be measured for these fans in a specific application.

Fan type		Lead wires
4650 TA	4600 TA	AWG 22, TR 32
4656 TA	4606 TA	AWG 18

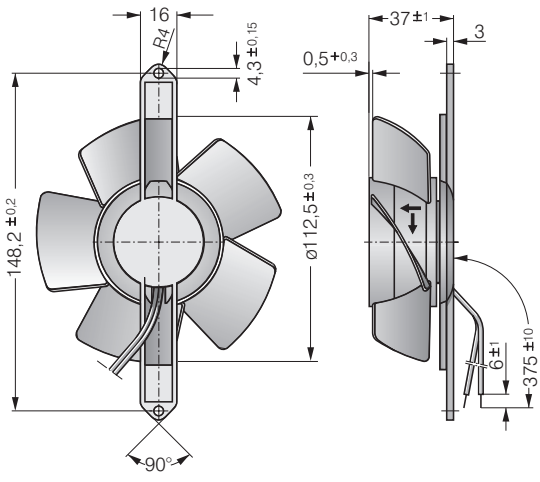

max. 140 m^3/h

AC axial fans

Series 4600 TZ 108 Ø x 37 mm

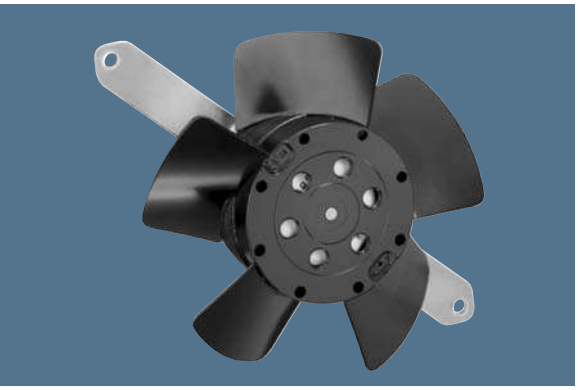

- AC fans with external rotor shaded-pole motor. Impedance protected against overloading.
- Impeller and mounting bracket of metal.
- Air exhaust over mounting bracket. Direction of rotation clockwise, seen on rotor.
- Electrical connection via 2 leads. Bared and tin-plated.
- Mass: 430 g.
- Please note our new ACmaxx series. With identical mounting dimensions and voltages, this series achieves higher energy efficiency.

Nominal data	Air flow	Air flow	Nominal voltage	Frequency	Sound pressure level	Sintec sleeve bearings / Ball bearings	Power input	Nominal speed	Temperature range	Service life L_{10} at 40 °C	at T max	Curve
Type	**m^3/h**	**CFM**	**V**	**Hz**	**dB(A)**	**□ / ■**	**Watts**	**RPM**	**°C**	**Hours**	**Hours**	
4650 TZ	125	73,6	**230**	**50**	42	□	19,0	2 600	-10...+50	37 500 / 37 500		–
4656 TZ	125	73,6	**230**	**50**	42	■	19,0	2 600	-40...+65	37 500 / 20 000		–
4600 TZ	140	82,4	**115**	**60**	45	□	18,0	2 950	-10...+50	40 000 / 32 500		–
4606 TZ	140	82,4	**115**	**60**	45	■	18,0	2 950	-40...+75	40 000 / 17 500		–

The air flow and noise level of fans without external housing depends on the installation conditions. The stated air flow and noise has been measured with an orifice 109 mm Ø at a distance of approx. 17 mm from the mounting bracket. Under exceptionally favourable mounting conditions, the air flow of fan series 4000 Z is achievable. The noise in the optimal operating range can only be measured for these fans in a specific application.

Fan type		Lead wires
4650 TZ	4600 TZ	AWG 22, TR 32
4656 TZ	4606 TZ	AWG 18

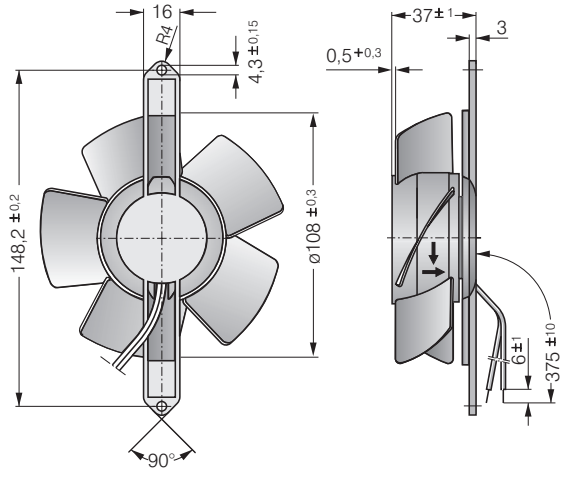

HP IP54 SP

ebmpapst

max. 206 m^3/h

AC axial fans

Series 5900 127 x 127 x 38 mm

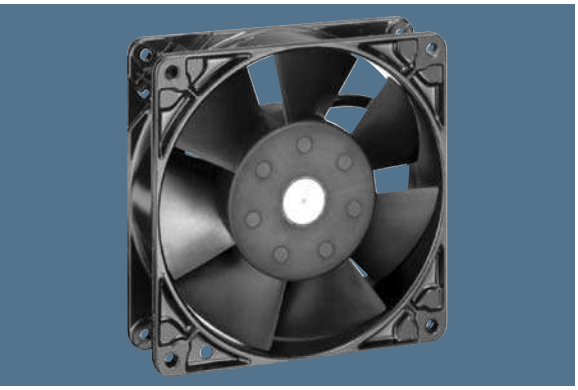

- AC fans with internal rotor shaded-pole motor. Impedance protected against overloading.
- Metal fan housing and impeller of fibreglass-reinforced plastic PA.
- Air exhaust over struts. Direction of rotation counter-clockwise, seen on rotor.
- Electrical connection via 2 flat plugs 2.8 x 0.8 mm.
- Fan housing with grounding lug and screw M4 x 6.
- Mass: 570 g.
- Please note our new ACmaxx series. With identical mounting dimensions and voltages, this series achieves higher energy efficiency.

Nominal data	Air flow	Air flow	Nominal voltage	Frequency	Sound pressure level	Sound power level	Sintec sleeve bearings / Ball bearings	Power input	Nominal speed	Temperature range	Service life L_{10} at 40 °C at T max	Curve
Type	**m^3/h**	**CFM**	**V**	**Hz**	**dB(A)**	**Bel(A)**	□ / ■	**Watts**	**RPM**	**°C**	**Hours Hours**	
5988	150	88,3	**230**	**50**	37	4,9	■	13,0	2 250	-30...+55	35 000 / 20 000	1
5950	180	105,9	**230**	**50**	43	5,4	□	18,0	2 700	-20...+50	40 000 / 32 500	3
5958	180	105,9	**230**	**50**	44	5,5	■	18,0	2 750	-30...+60	40 000 / 25 000	3
5938	162	95,3	**115**	**60**	40	4,9	■	12,0	2 500	-30...+55	35 000 / 20 000	2
5900	206	121,2	**115**	**60**	46	5,7	□	17,0	3 050	-20...+55	42 500 / 30 000	4
5908	206	121,2	**115**	**60**	47	5,8	■	17,0	3 100	-30...+75	42 500 / 20 000	4

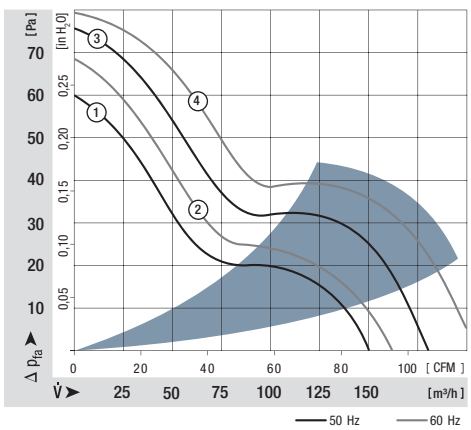

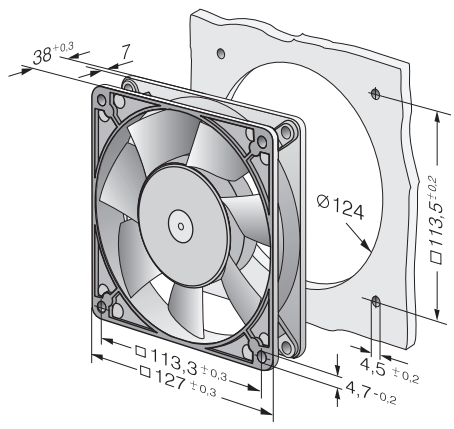

max. 270 m^3/h

AC axial fans

Series 5600 135 x 135 x 38 mm

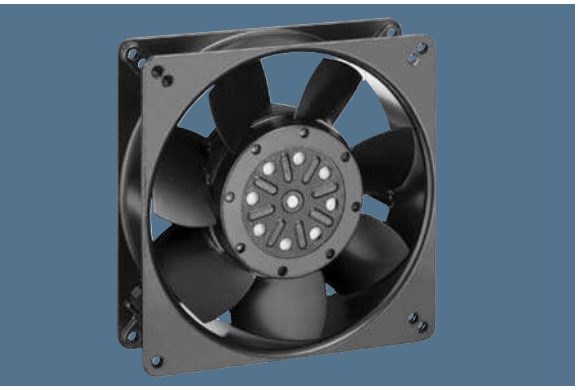

- AC fans with external rotor shaded-pole motor.
  Protected against overloading by thermal cut-out.
- Metal fan housing and impeller.
- Air exhaust over struts. Direction of rotation counter-clockwise, seen on rotor.
- Electrical connection via 2 flat plugs 2.8 x 0.5 mm.
- Fan housing with grounding lug and screw M4 x 8 (TORX).
- Mass: 800 g.
- Please note our new ACmaxx series. With identical mounting dimensions and voltages, this series achieves higher energy efficiency.

Nominal data	Air flow	Air flow	Nominal voltage	Frequency	Sound pressure level	Sound power level	Sintec sleeve bearings / Ball bearings	Power input	Nominal speed	Temperature range	Service life L_{10} at 40 °C	at T_{max}	Curve
Type	**m^3/h**	**CFM**	**V**	**Hz**	**dB(A)**	**Bel(A)**	**□ / ■**	**Watts**	**RPM**	**°C**	**Hours**	**Hours**	
5656 S	235	138,3	**230**	**50**	46	5,9	■	30,0	2 700	-35...+70	45 000 / 20 000		1
5606 S	270	158,9	**115**	**60**	50	6,2	■	26,0	3 100	-35...+80	47 500 / 20 000		2

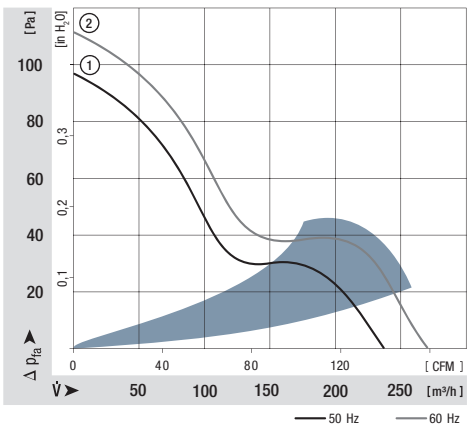

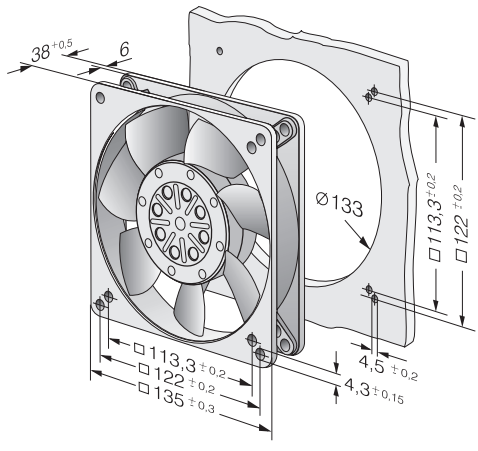

HP IP54 SP

ebmpapst

max. 380 m^3/h

AC axial fans

Series 7000 150 x 172 x 38 mm

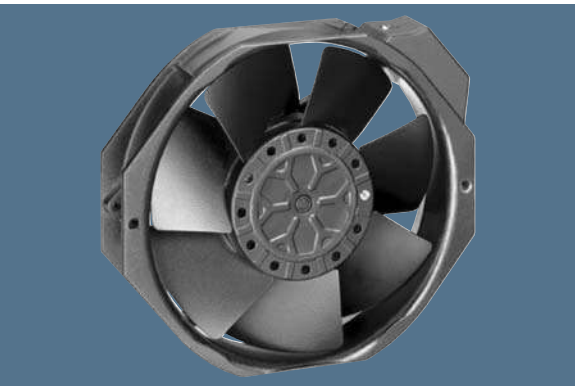

- AC fans with external rotor capacitor motor. Protected against overloading by integrated thermal cut-out.
- Metal fan housing and impeller.
- Air exhaust over struts. Direction of rotation counter-clockwise, seen on rotor.
- Electrical connection via 2 flat plugs 2.8 x 0.5 mm.
- Fan housing with grounding lug and screw M4 x 6.
- Mass: 900 g.
- Please note our new ACmaxx series. With identical mounting dimensions and voltages, this series achieves higher energy efficiency.

Nominal data	Air flow	Air flow	Nominal voltage	Frequency	Sound pressure level	Sound power level	Sintec sleeve bearings / Ball bearings	Power input	Nominal speed	Temperature range	Service life L_{10} at 40 °C	at T max	Curve
Type	**m^3/h**	**CFM**	**V**	**Hz**	**dB(A)**	**Bel(A)**	**□ / ■**	**Watts**	**RPM**	**°C**	**Hours**	**Hours**	
7056 ES	320	188,3	**230**	**50**	51	6,4	■	27,0	2 800	-25...+55	60 000 / 32 000		1
7006 ES	380	223,6	**115**	**60**	56	6,8	■	28,0	3 350	-25...+65	55 000 / 18 000		2

Minimum ambient temperature -15 °C.

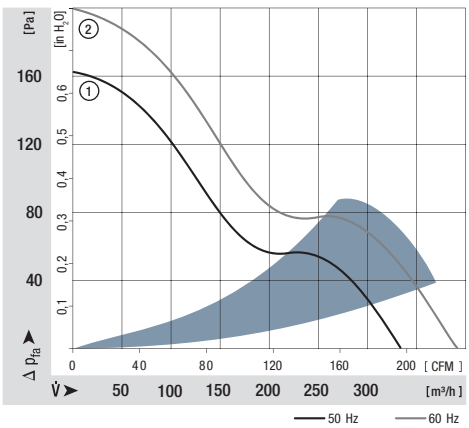

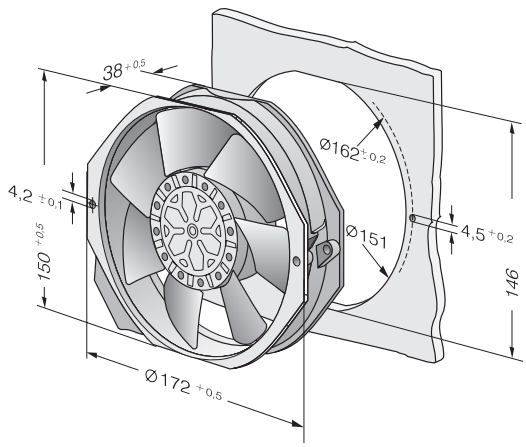

max. 380 m^3/h

AC axial fans

Series 7800 150 Ø x 55 mm



- AC fans with external rotor shaded-pole motor. Protected against overloading by integrated thermal cut-out.
- Metal fan housing and impeller.
- Air exhaust over struts. Direction of rotation counter-clockwise, seen on rotor.
- Electrical connection via 2 leads. Bared and tin-plated.
- Fan housing with grounding lug and screw M4 x 6.
- Mass: 1.1 kg.
- Please note our new ACmaxx series. With identical mounting dimensions and voltages, this series achieves higher energy efficiency.

Nominal data	Air flow	Air flow	Nominal voltage	Frequency	Sound pressure level	Sound power level	Sintec sleeve bearings / Ball bearings	Power input	Nominal speed	Temperature range	Service life L_{10} at 40 °C	at T max	Curve
Type	**m^3/h**	**CFM**	**V**	**Hz**	**dB(A)**	**Bel(A)**	□ / ■	**Watts**	**RPM**	**°C**	**Hours**	**Hours**	
7855 ES	325	191,3	**230**	**50**	49	6,0	■	45,0	2 800	-25...+50	60 000 / 47 000		1
7856 ES	325	191,3	**230**	**50**	49	6,0	■	45,0	2 800	-25...+70	60 000 / 23 000		1
7805 ES	380	223,7	**115**	**60**	53	6,4	■	38,0	3 250	-25...+70	60 000 / 47 000		2
7806 ES	380	223,7	**115**	**60**	53	6,4	■	38,0	3 250	-25...+90	60 000 / 18 000		2

Minimum ambient temperature -15 °C, admissible for a short time at -30 °C; without condensation.

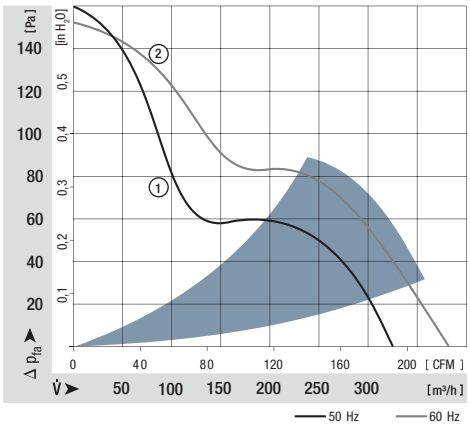

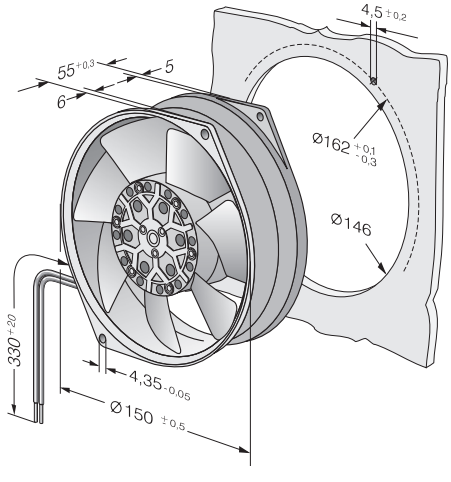

ebmpapst

max. 425 m^3/h

AC axial fans

Series 7400 150 Ø x 55 mm

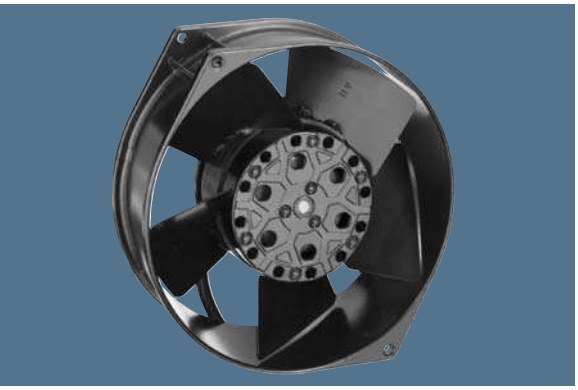

- AC fans with external rotor shaded-pole motor. Protected against overloading by integrated thermal cut-out.
- Metal fan housing and impeller.
- Air exhaust over struts. Direction of rotation counter-clockwise, seen on rotor.
- Electrical connection via 2 leads. Strand ends with brass lead tips.
- Fan housing with grounding lug and screw M4 x 6.
- Mass: 1.1 kg.
- Please note our new ACmaxx series. With identical mounting dimensions and voltages, this series achieves higher energy efficiency.

Nominal data	Air flow	Air flow	Nominal voltage	Frequency	Sound pressure level	Sound power level	Sintec sleeve bearings / Ball bearings	Power input	Nominal speed	Temperature range	Service life L_{10} at 40 °C	at T max	Curve
Type	**m^3/h**	**CFM**	**V**	**Hz**	**dB(A)**	**Bel(A)**	**□ / ■**	**Watts**	**RPM**	**°C**	**Hours**	**Hours**	
7450 ES	380	223,6	**230**	**50**	60	6,8	■	47,0	2 700	-25...+50	63 000 / 50 000		1
7400 ES	425	250,1	**115**	**60**	62	6,9	■	46,0	3 050	-25...+70	50 000 / 24 000		2

Minimum ambient temperature -15 °C, admissible for a short time at -30 °C; without condensation.

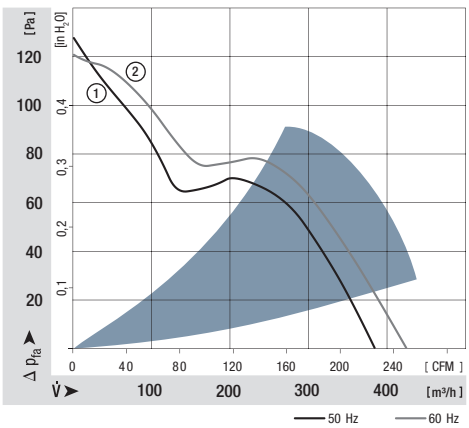

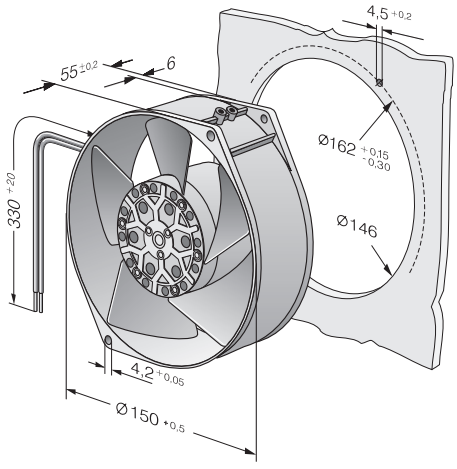

max. 500 m^3/h

AC axial fans

Series 6000 172 Ø x 51 mm



- AC fans with external rotor capacitor motor. Protected against overloading by integrated thermal cut-out.
- Metal fan housing and impeller.
- Air exhaust over struts. Direction of rotation counter-clockwise, seen on rotor.
- Electrical connection via 2 flat plugs 2.8 x 0.5 mm.
- Fan housing with grounding lug and screw M4 x 6.
- Mass: 1.0 kg.
- Please note our new ACmaxx series. With identical mounting dimensions and voltages, this series achieves higher energy efficiency.

Nominal data	Air flow	Air flow	Nominal voltage	Frequency	Sound pressure level	Sound power level	Sintec sleeve bearings / Ball bearings	Power input	Nominal speed	Temperature range	Service life L_{10} at 40 °C	at T max	Curve
Type	**m^3/h**	**CFM**	**V**	**Hz**	**dB(A)**	**Bel(A)**	□ / ■	**Watts**	**RPM**	**°C**	**Hours**	**Hours**	
6058 ES	375	220,7	**230**	**50**	55	5,9	■	24,0	2 800	-25...+70	62 000 / 31 000		1
6078 ES	420	247,2	**230**	**50**	54	6,3	■	26,0	2 800	-25...+60	62 000 / 39 000		2
6008 ES	440	259,0	**115**	**60**	60	6,4	■	26,0	3 300	-25...+70	57 000 / 28 000		3
6028 ES	500	284,3	**115**	**60**	58	6,7	■	29,0	3 300	-25...+75	57 000 / 22 000		4

Minimum ambient temperature -15 °C, admissible for a short time at -30 °C; without condensation.

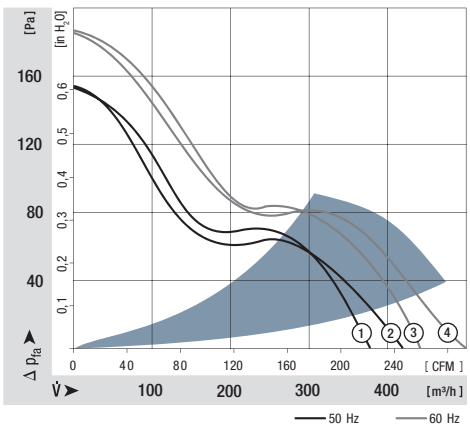

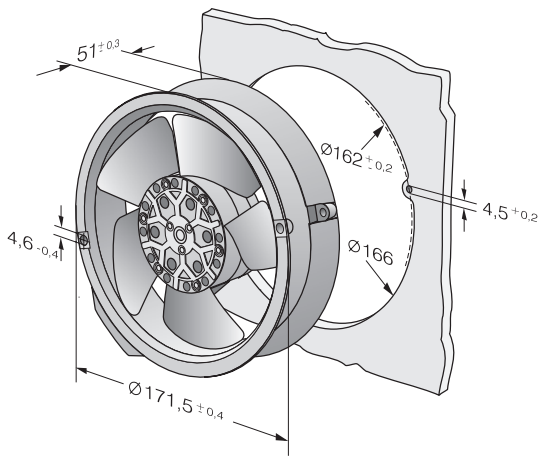

ebmpapst

max. 1030 m³/h

AC axial fans

W** 200 225 x 225 x 80 mm



- External-rotor single-phase motor.* / External rotor shaded-pole motor.**
- Motor protection: TOP wired internally.
- Material: Wall ring die-cast aluminium, seven blades of sheet steel. Blades and rotor coated in black.
- Direction of air flow “V”, air exhaust over struts. Direction of rotation: counter-clockwise, seen on rotor.
- Electrical connection: Terminal strip (operating capacitor connected).
- Continuous operation (S1).
- Insulation class: “F”
- Mass: 2 kg.
- Please note our new ACmaxx series. With identical mounting dimensions and voltages, this series achieves higher energy efficiency.

Nominal data	Air flow	Air flow	Nominal voltage	Frequency	Sound pressure level	Sound power level	Sleeve bearings / Ball bearings	Power input	Nominal speed	Temperature range	Service life L_{10} at 40 °C	at T_{max}	Curve
Type	**m³/h**	**CFM**	**V**	**Hz**	**dB(A)**	**Bel(A)**	□/■	**Watts**	**RPM**	**°C**	**Hours**	**Hours**	
W2E200-HK86-01*	1030	606,2	**115**	**60**	61	6,7	■	80,0	2800	-25...+65	60 000 / 58 000		2
W2E200-HK38-01*	880	517,9	**230**	**50**	58	6,6	■	64,0	2550	-25...+60	63 000 / 60 000		2
W4S200-HK04-01**	450	264,9	**230**	**50**	40	4,7	■	30,0	1370	-25...+70	85 000 / 80 000		1

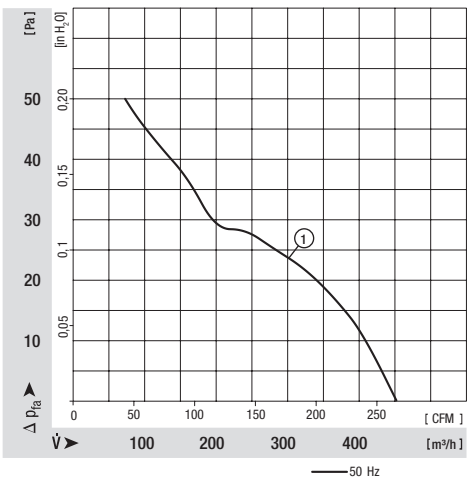

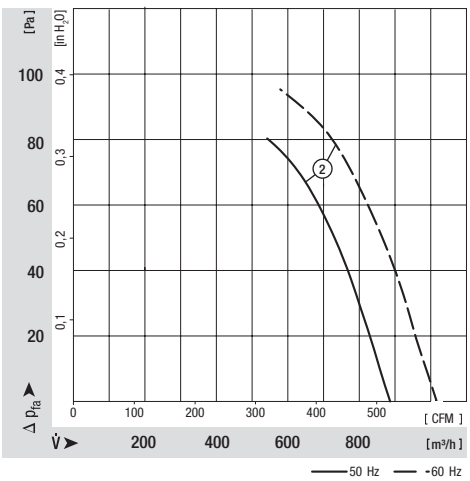

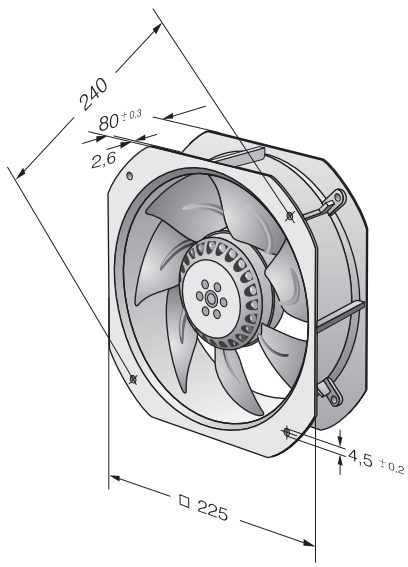

max. 1865 m^3/h

AC axial fans

W2E 250 280 x 280 x 80 mm



- External-rotor single-phase motor.
- Motor protection: TOP wired internally.
- Material: Wall ring die-cast aluminium, seven blades of sheet steel. Blades and rotor coated in black.
- Direction of air flow “V”, air exhaust over struts. Direction of rotation: counter-clockwise, seen on rotor.
- Electrical connection: Terminal strips (operating capacitor connected).
- Continuous operation (S1).
- Insulation class: “F”
- Mass: 2 kg.
- Please note our new ACmaxx series. With identical mounting dimensions and voltages, this series achieves higher energy efficiency.

Nominal data	Air flow	Air flow	Nominal voltage	Frequency	Sound pressure level	Sound power level	Sleeve bearings Ball bearings	Power input	Nominal speed	Temperature range	Service life L_{10} at 40 °C	at T max	Curve
Type	**m^3/h**	**CFM**	**V**	**Hz**	**dB(A)**	**Bel(A)**	□/■	**Watts**	**RPM**	**°C**	**Hours**	**Hours**	
W2E 250-HL06-01	1865	1077,1	**230**	**50**	66	7,2	■	127,0	2 550	-25...+60	63 000 / 70 000		3

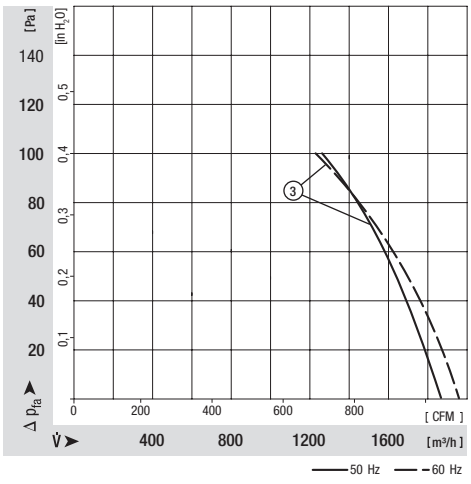

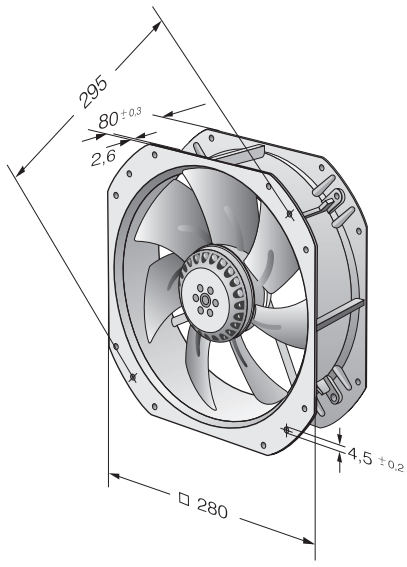

ebmpapst

AC centrifugal fans

	AC centrifugal fan overview	165
	AC centrifugal fans	166



AC fans

Technical information

Product line
The renowned ebm-papst AC fans are used when DC voltage is not available. The AC range of fans is based on experience gained from decades of development activity, millions of units in series production and competence in innovation of a world-wide technological leader.

A wide range of fans for AC operation is presented in this catalogue. In addition to complete device fans, you will also find fans without external housing, providing a particularly economical advantage when the air duct can be integrated in the respective device.

Variety of sizes
AC fans are available in a variety of sizes with either air exhaust or air intake over struts. Silent running models with sleeve bearings or for extreme ambient conditions; fans with ball bearings are available with plug connection or external leads.

Shaded-pole or capacitor motors
Fan drives by shaded-pole or capacitor motors, most of which incorporate the world-famous ebm-papst external rotor principle: The fan blades are directly attached to the external rotor of the external rotor motor, thus combining both high performance and profitability.

Flat built AC fans
ebm-papst also has particularly flat built AC fans with internal rotor motor. Their advantage: quick start to full speed. A plastic impeller and the both smaller and lighter internal rotor motor lead to a lower moment of inertia.

Bearings
AC fans with sleeve bearings are powered by Class E insulated motors. Fans with ball bearings are equipped with Class B, E or F insulated motors.

Protection class
All ebm-papst fans conform to the requirements of IP 20. Fans conforming to IP 54 and special types of protection class are also available.

AC voltage
The line of AC fans for Euro voltage according to IEC 60038 (230 V + 6 %, -10 %) is basically also available for 115 V.

Frequencies
AC fans can be operated at frequencies of 50 Hz or 60 Hz. However, their technical data then change accordingly.

Capacitor
Fans driven by capacitor external motors provide particularly high operating efficiency. Generally, the required operating capacitor is already integrated in the fan housing.

Overloading
Almost all AC fans are protected against overloading (e.g. due to locked rotor) the drive motors are either impedance protected (marked “Impedance protected”, and/or “Z.P.”) or are equipped with a thermal switch (marked “Thermally protected” or “Th.P.”). The model designation of these fans ends with “S”.

Centrifugal fans for AC operation

Overview of air prformance

Dimension	Series	Air flow	Page
mm		m^3/h	
□ 121 x 37	RL 90	40...42	166
□ 135 x 38	RG 90	47...54	167
□ 180 x 40	RG 125	86...94	168
□ 220 x 56	RG 160	202...223	169
Ø 138 x 40	RER 125	104...115	170
Ø 176 x 54	RER 160	234...274	171



Overview of technically feasible designs

Centrifugal fans								
Series	mm	Dimension	VDE, UL, CSA	Sintec sleeve bearings/ ball bearings	OPTIONAL: Speed sensor	Humidity protection	IP >= IP54	Salt spray fog protection	P.
RL 90	121 x 121 x 37	yes	□/■	–	•	•	•	166
RG 90	135 x 135 x 38	yes	□/■	–	•	•	•	167
RG 125	180 x 180 x 40	yes	■	–	•	•	•	168
RG 160	220 x 220 x 56	yes	■	–	•	•	•	169
RER 125	138 Ø x 40	yes	■	–	•	•	•	170
RER 160	176 Ø x 54	yes	■	–	•	•	•	171

• availabe – not yet available □ Sleeve bearings ■ Ball bearings

Information on pictograms

On the pages of the catalogue and on the following overview pages, the pictograms illustrated below provide information about technically possible special versions in the fan line presented.

Please note that these special versions are not possible for all voltages and speeds, and not in all combinations.

The special versions are designed for specific customers and projects and are not usually available off the shelf.



Speed signal

The fan uses a separate wire to output information about its speed, and thus about the speed of the rotor. For technical details, please refer to page 110.



Protection against moisture

Protection for the fan's electronics against moisture and condensation. For technical details, please refer to page 123.



IP 54

Protection of motor and PCB board against splashed water and humidity. For technical details, please refer to page 123.



Protection against salt spray fog

Protection of fan against the damaging effects of salt spray fog. For technical details, please refer to page 123.

max. 42 m^3/h

AC centrifugal fans

Series RL 90 121 x 121 x 37 mm

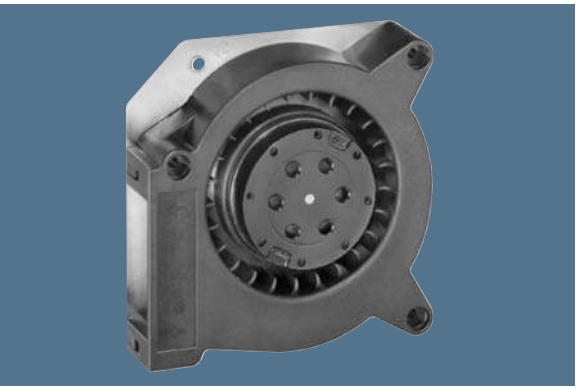

- AC centrifugal fan with external rotor shaded-pole motor. Impedance protected against overloading.
- Spiral housing and impeller of fibreglass-reinforced plastic. Housing base of galvanised steel plate. Housing base with flat plug 6.3 x 0.8 mm for protective earth.
- Direction of air flow radial, through housing port. Direction of rotation clockwise, seen on rotor.
- Electrical connection via 2 leads. Bared and tin-plated.
- Mass: 680 g.

Nominal data	Air flow	Air flow	Nominal voltage	Frequency	Sound power level	Sintec sleeve bearings / Ball bearings	Power input	Nominal speed	Temperature range	Service life L_{10} at 40 °C	at T max	Curve
Type	**m^3/h**	**CFM**	**V**	**Hz**	**Bel(A)**	□ / ■	**Watts**	**RPM**	**°C**	**Hours**	**Hours**	
RL 90-18/50	40	23,5	**230**	**50**	5,6	□	20,0	2 450	-10...+50	37 500	30 000	1
RL 90-18/56	40	23,5	**230**	**50**	5,6	■	20,0	2 450	-30...+70	37 500	20 000	1
RL 90-18/00	42	24,7	**115**	**60**	6,0	□	19,5	2 550	-10...+60	37 500	25 000	2
RL 90-18/06	42	24,7	**115**	**60**	6,0	■	19,5	2 550	-30...+85	37 500	15 000	2

Fan type		Lead wires
RL 90-18/50	RL 90-18/00	AWG 18, TR 32
RL 90-18/56	RL 90-18/06	AWG 22

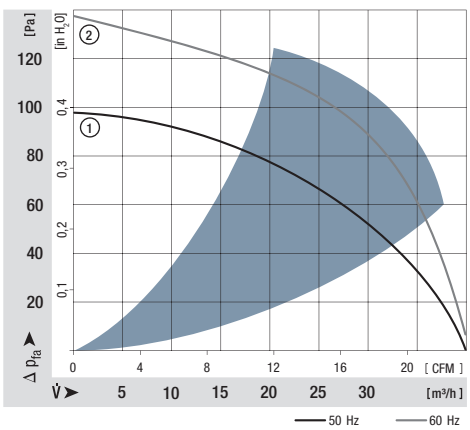

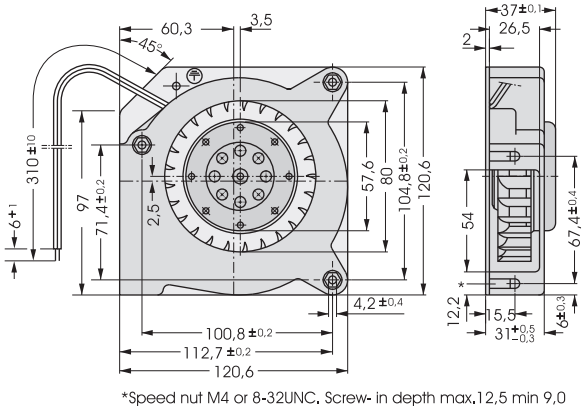

*Speed nut M4 or 8-32UNC. Screw- in depth max.12,5 min 9,0

HP IP54 SP

ebmpapst

max. 54 m^3/h

AC centrifugal fans

Series RG 90 135 x 135 x 38 mm

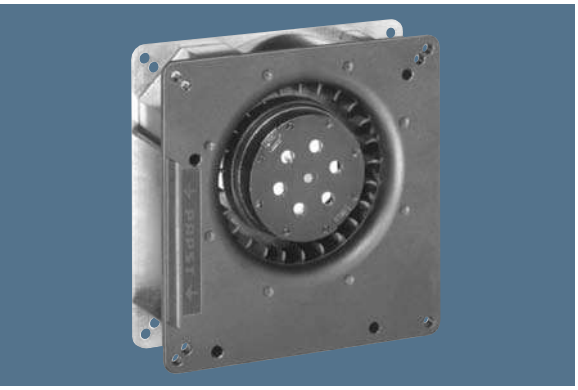

- AC centrifugal fan with external rotor shaded-pole motor. Impedance protected against overloading.
- Spiral housing and impeller of fibreglass-reinforced plastic. Housing base of galvanised steel plate.
- Direction of air flow radial, through housing port. Direction of rotation clockwise, seen on rotor.
- Electrical connection via 2 leads AWG 22. Bared and tin-plated.
- Mass: 560 g.

Nominal data	Air flow	Air flow	Nominal voltage	Frequency	Sound power level	Sintec sleeve bearings / Ball bearings	Power input	Nominal speed	Temperature range	Service life L_{10} at 40 °C at T max	Curve
Type	**m^3/h**	**CFM**	**V**	**Hz**	**Bel(A)**	**□ / ■**	**Watts**	**RPM**	**°C**	**Hours Hours**	
RG 90-18/50	54	31,8	**230**	**50**	5,8	□	22,0	2 200	-30...+60	35 000 / 20 000	1
RG 90-18/56	54	31,8	**230**	**50**	5,8	■	22,0	2 200	-30...+60	35 000 / 20 000	1
RG 90-18/00	47	27,7	**115**	**60**	6,2	□	22,0	1 900	-30...+65	35 000 / 20 000	2
RG 90-18/06	47	27,7	**115**	**60**	6,2	■	22,0	1 900	-30...+65	35 000 / 20 000	2

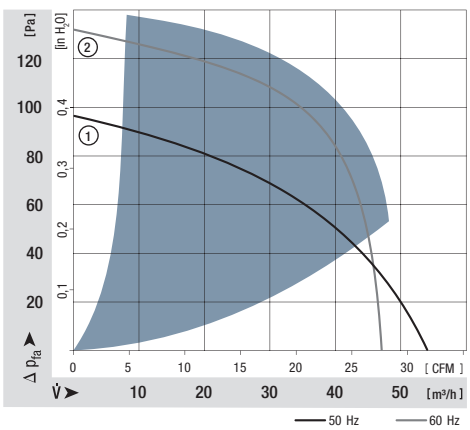

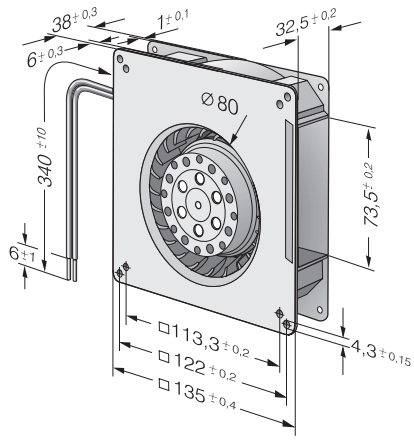

max. 94 m^3/h

AC centrifugal fans

Series RG 125 180 x 180 x 40 mm

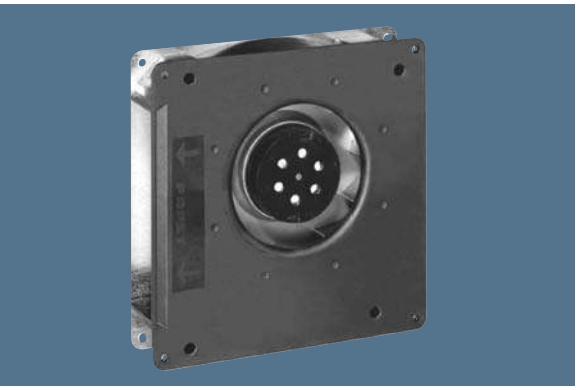

- AC centrifugal fan with external rotor shaded-pole motor. Impedance protected against overloading.
- Spiral housing and impeller of fibreglass-reinforced plastic. Housing base of galvanised steel plate.
- Direction of air flow radial, through housing port. Direction of rotation clockwise, seen on rotor.
- Electrical connection via 2 leads AWG 22. Bared and tin-plated.
- Mass: 850 g.

Nominal data	Air flow	Air flow	Nominal voltage	Frequency	Sound power level	Sintec sleeve bearings / Ball bearings	Power input	Nominal speed	Temperature range	Service life L_{10} at 40 °C	at T max	Curve
Type	**m^3/h**	**CFM**	**V**	**Hz**	**Bel(A)**	**□ / ■**	**Watts**	**RPM**	**°C**	**Hours**	**Hours**	
RG 125-19/56	86	50,6	**230**	**50**	5,8	■	20,0	2 550	-30...+70	37 500 / 20 000		1
RG 125-19/06	94	55,3	**115**	**60**	6,0	■	19,0	2 750	-30...+80	40 000 / 15 000		2

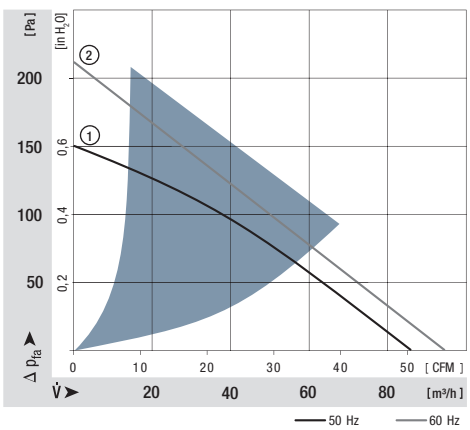

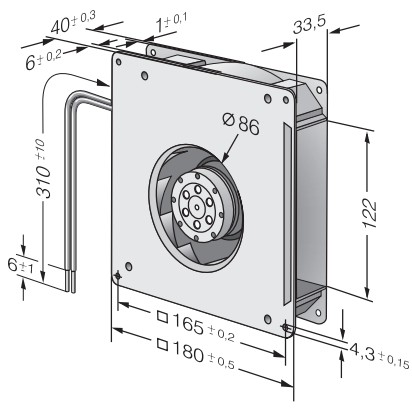

HP IP54 SP

ebmpapst

max. 223 m^3/h

AC centrifugal fans

Series RG 160 220 x 220 x 56 mm

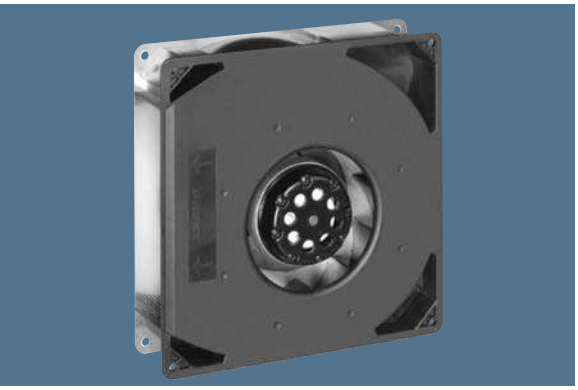

- AC centrifugal fan with external rotor shaded-pole motor. Thermal contactor as protection against thermal overloading.
- Spiral housing and impeller of fibreglass-reinforced plastic. Housing base of galvanised steel plate.
- Direction of air flow radial, through housing port. Direction of rotation counter-clockwise, seen on rotor.
- Electrical connection via leads AWG 18. Bared and tin-plated.
- Mass: 1.7 kg.

Nominal data	Air flow	Air flow	Nominal voltage	Frequency	Sound power level	Sintec sleeve bearings / Ball bearings	Power input	Nominal speed	Temperature range	Service life L_{10} at 40 °C	at T_{max}	Curve
Type	**m^3/h**	**CFM**	**V**	**Hz**	**Bel(A)**	□ / ■	**Watts**	**RPM**	**°C**	**Hours**	**Hours**	
RG 160-28/56S	202	118,9	**230**	**50**	6,6	■	47,0	2 750	-30...+70	30 000 / 15 000		1
RG 160-28/06S	223	131,3	**115**	**60**	6,9	■	50,0	3 050	-30...+80	27 500 / 12 500		2

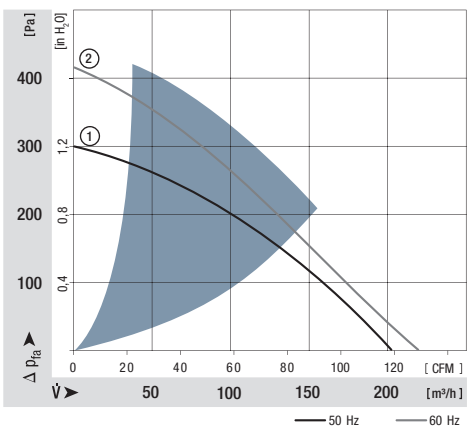

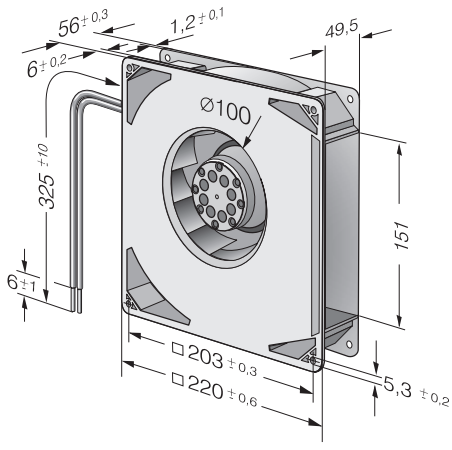

max. 115 m^3/h

AC centrifugal fans

Series RER 125 138 Ø x 40 mm

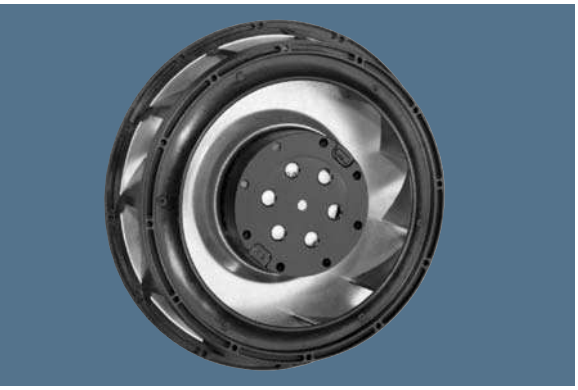

- AC centrifugal fan with external rotor shaded-pole motor. Impedance protected against overloading.
- Impeller of fibreglass-reinforced plastic, with steel plate reinforced.
- Direction of air flow radial. Direction of rotation clockwise, seen on rotor.
- Electrical connection via leads AWG 22. Bared and tin-plated.
- Mass: 500 g.

Nominal data	Air flow	Air flow	Nominal voltage	Frequency	Sound power level	Sintec sleeve bearings / Ball bearings	Power input	Nominal speed	Temperature range	Service life L_{10} at 40 °C	at T max	Curve
Type	**m^3/h**	**CFM**	**V**	**Hz**	**Bel(A)**	□ / ■	**Watts**	**RPM**	**°C**	**Hours**	**Hours**	
RER 125-19/56	104	61,2	**230**	**50**	6,2	■	19,0	2 600	-30...+60	37 500 / 22 500		1
RER 125-19/06	115	67,7	**115**	**60**	6,5	■	18,0	2 850	-30...+70	40 000 / 20 000		2

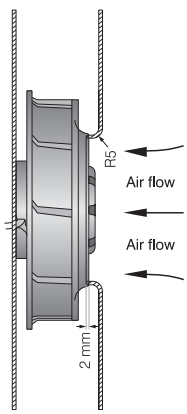

The air flow and noise level of fans without external housing depend on the installation conditions. The stated air flow and noise levels have been measured under the following conditions:
Centrifugal fan mounted on a base plate 220 x 220 mm. Cover plate 220 x 220 mm with an air inlet of Ø 86 mm, concentric to the impeller.

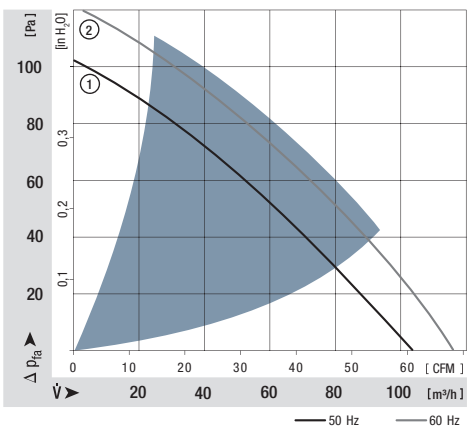

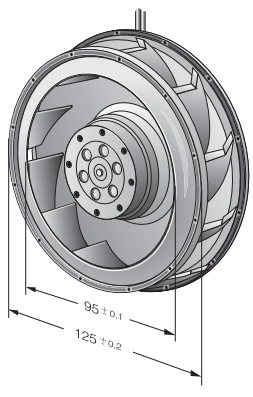

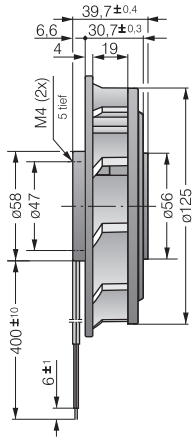

HP IP54 SP

ebmpapst

max. 274 m^3/h

AC centrifugal fans

Series RER 160 176 Ø x 54 mm



- AC centrifugal fan with external rotor shaded-pole motor. Impedance protected against overloading.
- Impeller of fibreglass-reinforced plastic, with steel plate reinforced.
- Direction of air flow radial. Direction of rotation counter-clockwise, seen on rotor.
- Electrical connection via leads AWG 18. Bared and tin-plated.
- Mass: 1.0 kg.

Nominal data	Air flow	Air flow	Nominal voltage	Frequency	Sound power level	Sintec sleeve bearings / Ball bearings	Power input	Nominal speed	Temperature range	Service life L_{10} at 40 °C	at T_{max}	Curve
Type	**m^3/h**	**CFM**	**V**	**Hz**	**Bel(A)**	**□ / ■**	**Watts**	**RPM**	**°C**	**Hours**	**Hours**	
RER 160-28/56S	234	137,7	**230**	**50**	6,6	■	45,0	2 800	-30...+60	30 000 / 20 000		1
RER 160-28/06S	274	161,3	**115**	**60**	6,8	■	46,0	3 250	-30...+70	30 000 / 15 000		2

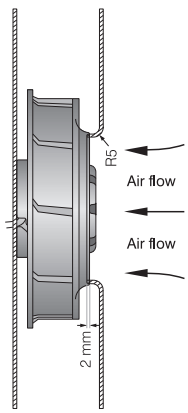

The air flow and noise level of fans without external housing depend on the installation conditions. The stated air flow and noise levels have been measured under the following conditions:
Centrifugal fan mounted on a base plate 260 x 260 mm. Cover plate 260 x 260 mm with an air inlet of Ø 100 mm, concentric to the impeller.

