7311 BECBJ

Popular item
SKF Explorer

Dimensions

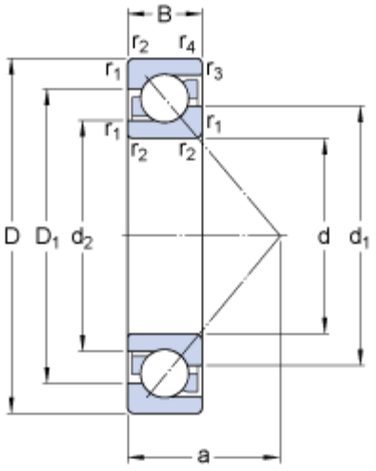

d		55	mm
D		120	mm
B		29	mm
d_1	≈	80.3	mm
d_2	≈	66.66	mm
D_1	≈	96.6	mm
a		51	mm
$r_{1,2}$	min.	2	mm
$r_{3,4}$	min.	1	mm

Abutment dimensions

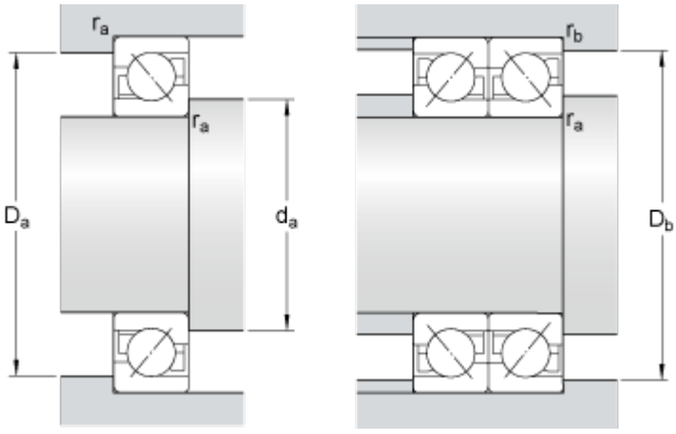

d_a	min.	66	mm
D_a	max.	109	mm
D_b	max.	114	mm
r_a	max.	2	mm
r_b	max.	1	mm

Calculation data

Basic dynamic load rating	C	85	kN
Basic static load rating	C_0	60	kN
Fatigue load limit	P_u	2.55	kN
Reference speed		7000	r/min
Limiting speed		7000	r/min
Calculation factor	A	0.0574	
Calculation factor	k_r	0.1	
Calculation factor	e	1.14	

Single bearing or bearing pair arranged in tandem

Calculation factor	X	0.35	

Calculation factor	Y_0	0.26
Calculation factor	Y_2	0.57

Bearing pair arranged back-to-back or face-to-face

Calculation factor	X	0.57
Calculation factor	Y_0	0.52
Calculation factor	Y_1	0.55
Calculation factor	Y_2	0.93

Mass

Mass bearing	1.41	kg