E43221

Coaxial pipe for level sensors

LR COAX TUBE NPT L1600

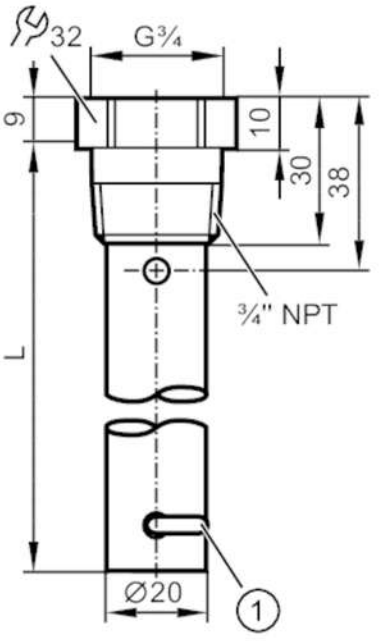

1 fixing bracket for centring piece

CRN

Application		
Design		for level sensors LR
Medium temperature	[°C]	-40...200
Pressure rating	[bar]	16
Vacuum resistance	[mbar]	-1000
MAWP (for applications according to CRN)	[bar]	16
Mechanical data		
Weight	[g]	875
Materials		Coaxial pipe: stainless steel (1.4301 / 304); Centring piece: PPS reinforced fibre; fixing bracket: stainless steel (1.4310 / 301)
Sensor connection		threaded connection G 3/4 external thread
Process connection		threaded connection 3/4" NPT internal thread
Length	[mm]	1600
Remarks		
Pack quantity		1 pcs.