BF150T4A46060

FOUR-POLE CONTACTOR, IEC OPERATING CURRENT ITH (AC1) = 165A, AC COIL 60HZ, 460VAC



Product designation			Power contactor
Product type designation			BF150
Contact characteristics			
Number of poles		Nr.	4
Rated insulation voltage Ui IEC/EN		V	1000
Rated impulse withstand voltage Uimp		kV	8
Operational frequency			
	min	Hz	25
	max	Hz	400
IEC Conventional free air thermal current Ith		A	165
Operational current Ie			
	AC-1 (≤40°C)	A	165
	AC-1 (≤55°C)	A	135
	AC-1 (≤70°C)	A	118
	AC-3 (≤440V ≤55°C)	A	150
	AC-4 (400V)	A	70
IEC max current Ie in DC1 with L/R ≤ 1ms with 1 poles in series			
	≤24V	A	165
	48V	A	165
	75V	A	150
	110V	A	10
	220V	A	–
IEC max current Ie in DC1 with L/R ≤ 1ms with 2 poles in series			
	≤24V	A	165
	48V	A	165
	75V	A	165
	110V	A	150
	220V	A	14
IEC max current Ie in DC1 with L/R ≤ 1ms with 3 poles in series			
	≤24V	A	165
	48V	A	165
	75V	A	165
	110V	A	160
	220V	A	150
IEC max current Ie in DC1 with L/R ≤ 1ms with 4 poles in series			
	≤24V	A	165
	48V	A	165
	75V	A	165
	110V	A	165
	220V	A	165
IEC max current Ie in DC3-DC5 with L/R ≤ 15ms with 1 poles in series			
	≤24V	A	165
	48V	A	60
	75V	A	44
	110V	A	6

The characteristics described in this document are subject to updates or modifications at any time. The descriptions, technical and functional information, illustrations and instructions in this brochure are purely illustrative, and are consequently not contractually binding

	220V	A	–
IEC max current Ie in DC3-DC5 with L/R ≤ 15ms with 2 poles in series			
	≤24V	A	165
	48V	A	82
	75V	A	70
	110V	A	80
	220V	A	7
IEC max current Ie in DC3-DC5 with L/R ≤ 15ms with 3 poles in series			
	≤24V	A	165
	48V	A	195
	75V	A	110
	110V	A	120
	220V	A	120
IEC max current Ie in DC3-DC5 with L/R ≤ 15ms with 4 poles in series			
	≤24V	A	165
	48V	A	130
	75V	A	130
	110V	A	150
	220V	A	150
Short-time allowable current for 10s (IEC/EN60947-1)		A	1200
Protection fuse			
	gG (IEC)	A	250
	aM (IEC)	A	160
Making capacity (RMS value)		A	1500
Breaking capacity at voltage			
	440V	A	1200
	500V	A	1025
	690V	A	905
Resistance per pole (average value)		mΩ	0.45
Power dissipation per pole (average value)			
	Ith	W	12
	AC3	W	10.1
Tightening torque for terminals			
	min	Nm	6
	max	Nm	7
	min	lbin	4.4
	max	lbin	5.2
Tightening torque for coil terminal			
	min	Nm	0.8
	max	Nm	1
	min	lbin	0.59
	max	lbin	0.74
Conductor section			
AWG/Kcmil			
	max		2/0
Flexible w/o lug conductor section			
	min	mm²	1.5
	max	mm²	70
Flexible c/w lug conductor section			
	min	mm²	1.5
	max	mm²	70
Power terminal protection according to IEC/EN 60529			IP20 front

Mechanical features

The characteristics described in this document are subject to updates or modifications at any time. The descriptions, technical and functional information, illustrations and instructions in this brochure are purely illustrative, and are consequently not contractually binding

BF150T4A46060

FOUR-POLE CONTACTOR, IEC OPERATING CURRENT ITH (AC1) = 165A, AC COIL 60HZ, 460VAC

Operating position				
		normal		Vertical plan
		allowable		±30°
Fixing				Screw / DIN rail 35mm
Weight			g	2420
Conductor section				
	AWG/kcmil conductor section			
		max		2/0
Operations				
Mechanical life			cycles	15000000
Electrical life			cycles	800000
Safety related data				
EMC compatibility				yes
AC coil operating				
Rated AC voltage at 60Hz			V	460
AC operating voltage				
	of 60Hz coil powered at 60Hz			
		pick-up		
			min	%Us 80
			max	%Us 110
		drop-out		
			min	%Us 20
			max	%Us 55
AC average coil consumption at 20°C				
	of 60Hz coil powered at 60Hz			
			in-rush	VA 300
			holding	VA 20
Dissipation at holding ≤20°C 50Hz			W	6.5
Max cycles frequency				
Mechanical operation			cycles/h	1500
Operating times				
Average time for Us control				
	in AC			
		Closing NO		
			min	ms 45
			max	ms 32
		Opening NO		
			min	ms 9
			max	ms 24
UL technical data				
General USE				
	Contactor			
			AC current	A 165
Short-circuit protection fuse, 600V				
	High fault			
			Short circuit current	kA 100
			Fuse rating	A 200
			Fuse class	J
	Standard fault			
			Short circuit current	kA 10
			Fuse rating	A 250
			Fuse class	RK5
Ambient conditions				

The characteristics described in this document are subject to updates or modifications at any time. The descriptions, technical and functional information, illustrations and instructions in this brochure are purely illustrative, and are consequently not contractually binding

BF150T4A46060

FOUR-POLE CONTACTOR, IEC OPERATING CURRENT ITH (AC1) = 165A, AC COIL 60HZ, 460VAC

Temperature

Operating temperature			
	min	°C	-50
	max	°C	70
Storage temperature			
	min	°C	-60
	max	°C	80
Max altitude		m	3000

Dimensions

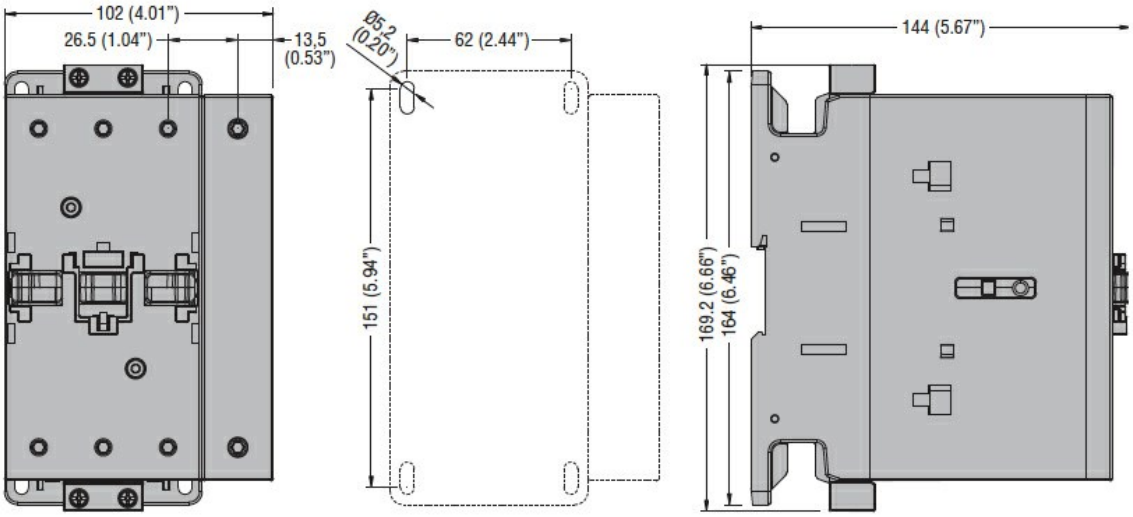

Wiring diagrams

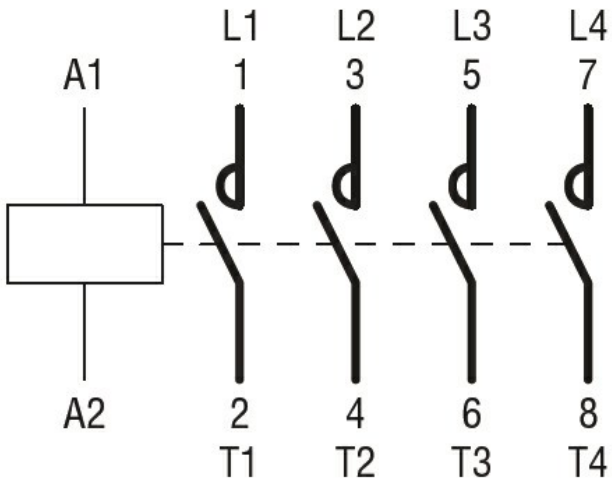

Certifications and compliance

Compliance

CSA C22.2 n° 60947-1
CSA C22.2 n° 60947-4-1
IEC/EN/BS 60947-1
IEC/EN/BS 60947-4-1
UL 60947-1
UL 60947-4-1

Certificates

CCC
cULus
EAC

The characteristics described in this document are subject to updates or modifications at any time. The descriptions, technical and functional information, illustrations and instructions in this brochure are purely illustrative, and are consequently not contractually binding

ETIM classification

ETIM 8.0	EC000066 - Power contactor, AC switching

The characteristics described in this document are subject to updates or modifications at any time. The descriptions, technical and functional information, illustrations and instructions in this brochure are purely illustrative, and are consequently not contractually binding