PRODUCT DETAILS

ARTICLE: 33633FR

WHEEL P 125X40/50 INOX ROLLER BRGS. INOX SWIVEL FORK X40L + BRAKE



Wheel series P

Monolitic polyammide 6 wheels available with standard shielded or stainless steel precision ball bearings; standard or stainless steel roller bearing; plain bore.
Wheel fitted with stainless steel roller bearing.

Castor series INOX40

Inox 40 series, polished stainless steel forks, swivels assemblies with double races & 'water resistant' protections. Finish: polished.
Trailing foot brake - total stop.

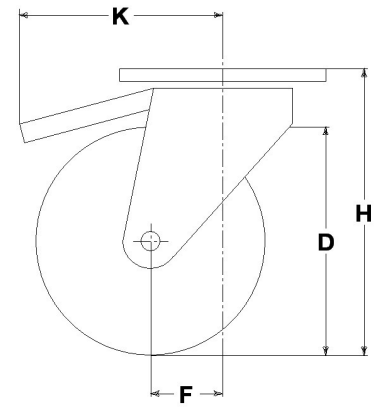

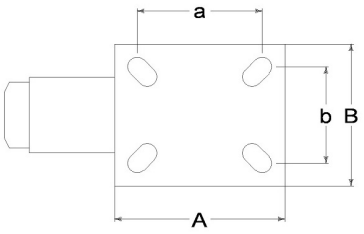

Technical data

Wheel diameter	D	125 mm
Tyre width	E	40,0 mm
Bore diameter	d	20 mm
Weight article		1,680 kg
Hub width	L	50 mm
Overall height	H	161 mm
Top plate outer dimensions	AxB	105x85 mm
Bolt hole spacing	axb	76x55 mm
Bolt hole spacing	axb	80x60 mm
Fixing bolt diameter	g	M8
Offset	F	42 mm
Fork width	U	50 mm
Load Capacity		300 kg

Related Articles

Spare part wheel: 4013/X
Basic version: 33633

GENERAL INFORMATION / RECOMMENDATIONS AND WARNINGS
The cited text and the complete catalogue in their most up-dated versions are available in the OEM's website page www.lagspa.it/downloads. The dimensions, descriptions, specifications and illustrations herein are indicative and subject to variations without notice. The fact that products are illustrated herein does not necessarily imply they are available from stock nor does it place us under any obligation to supply them.
Tests carried out refer to the original products with original accessories: the replacement of one of the components with others of different manufacture might prevent the same results from being achieved and will automatically invalidate any guarantee. Please contact our technical service concerning any special application.