





CONNECT AND PROTECT

Cabinet and Wall-mounted Case Accessories

nVent
SCHROFF

Cabinet Accessories

nVent SCHROFF

OVERVIEW

MAIN KATALOG

Cabinets 1

Wall mounted cases 2

Accessories for cabinets and wall mounted cases . . 3

Climate control . . 4

Electronics cases 5

Subracks/ 19" chassis 6

Front panels, plug-in units 7

Systems 8

Power supply units 9

Backplanes 10

Connectors, front panel component system 11

Appendix 12



MECHANICS



TELESCOPIC SLIDES

Electrics



36108007 (00504002 00509005 00508006 00508008 00505032 00711023 00504006 01495004)

nVent SCHROFF



36108008 (00510003 00510006 00709018 00711008 00709001 00708032)

Overview 3.0

Mechanics
19" front panels with cable eyes, cable through-ducting ... 3.2
19" cable tray 3.9
Cable ductings ... 3.10
19" equipment shelves 3.11
19" drawers 3.13
19" distribution field 3.14
19" mounting tray for LSA+ 3.15
19" module support 3.16
Assembly kit 3.17
Cable supports . 3.21
Cable channels .. 3.21

Telescopic slides 3.22

Electrics
Cabinet lights 3.29
Door contact switches 3.32
19" distributors .. 3.33
Small distribution modules 3.34
Supply modules .. 3.34
GND/earthing rails . 3.37
Equipment cables 3.38
Bus bars 3.39

Monitor, keyboard
Monitor, keyboard . 3.44
19" drawer with keyboard 3.45

Socket strips with connecting cable
SCHUKO 3.52
UTE 3.55
IEC 3.58
BS 3.61
US 3.62
Switzerland 3.63
19" power distributors, 3-phase 3.65
Socket strips, Wieland® 3.66

Power Control socket strips 3.72
Multimeter 3.74
Telemonitored socket strips 3.75
Power management software 3.79

FRONT PANEL EXPRESS

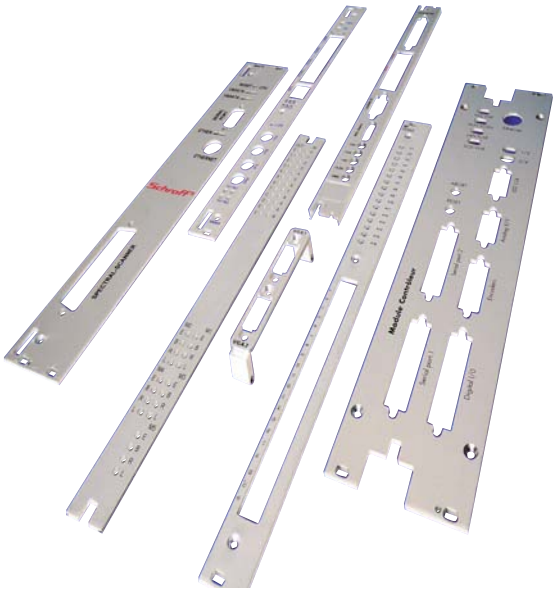

30402151_e

We make your front panel.
You determine how long it takes us.

- **Simple:** You configure your front panels direct online. No registration, no program downloads.
  The price is displayed immediately.
- **Fast:** You specify your front panel in just a few minutes - and we manufacture it from as little as in 2 days.
- **Flexible:** You determine the quantity and manufacturing time - and thus the cost.
- **Individual:** We make the panels to your specification - mechanical processing, painting and printing.
- **Practical:** We make the job easier for you - if you wish we will also fit the accessories.

19" FRONT PANELS WITH HOLES FOR HANDLES



00592006

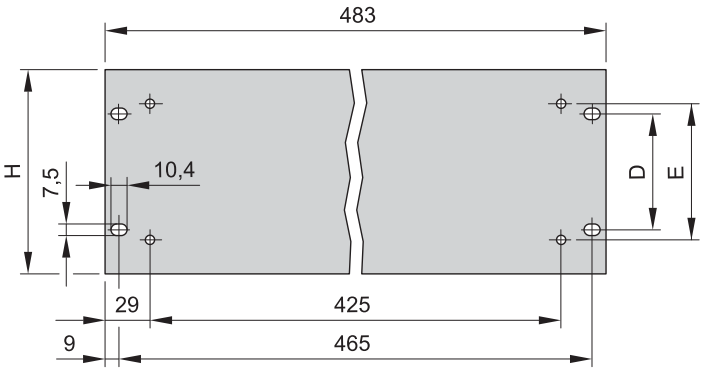

BZA42371

- 19" front panels have additional holes for mounting of handles

DELIVERY COMPRISES

Item	Qty	Description
1	1	19" front panel, Al

ORDER INFORMATION

Height	H	D	E	Front panel, 4 mm, anodised	Front panel, 3 mm, pre-anodised, cut edges plain
U	mm	mm	mm	Part no.	Part no.
1	43.6	31.7	25	**40304-050**	**30219-161**
2	88.1	76.2	55	**40304-051**	**30219-162**
3	132.5	57.1	88	**40304-052**	**30219-163**
4	177.0	101.6	120	**40304-053**	**30219-164**
5	221.4	146.0	180	**40304-054**	**30219-165**
6	265.9	190.4	180	**40304-055**	**30219-166**

NOTE

- 19" assembly kit, see page 3.17

FRONT HANDLE, ONE-PIECE, WIDTH 12.2 MM

1 U

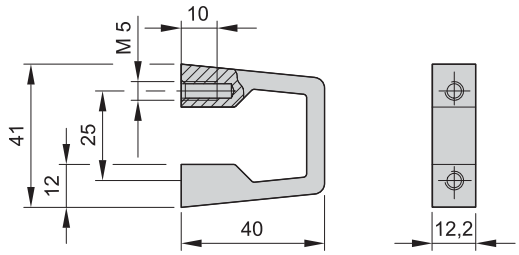

BZA42316

2 U ... 6 U

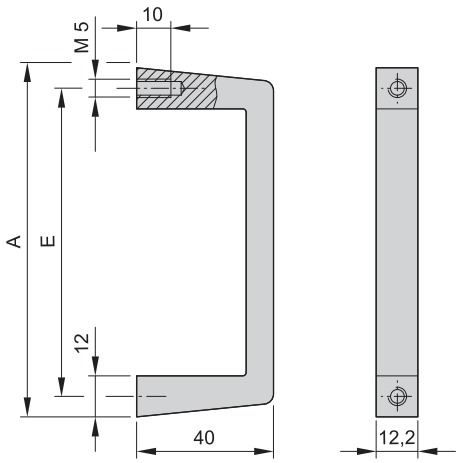

BZA42327

- Static load-carrying capacity 30 kg/pair
- Bolted from rear

DELIVERY COMPRISES

Item	Qty	Description
1	1	Front handle, Al extrusion, anodised

ORDER INFORMATION

Height U	A mm	E mm	clear anodised Part no.	black anodised Part no.
1	41	25	**10501-116**	–
2	69	55	**10501-004**	**10501-025**
3	102	88	**10501-005**	**10501-026**
4	132	120	**10501-006**	**10501-027**
5	194	180	**10501-007**	**10501-028**
6	249	235	**10501-008**	**10501-029**
Accessories				
Panhead screw pozidrive self-locking, M5 × 12, zinc-plated, PU 100 pieces				**21100-788**

Delivery is exclusively in Standard Pack Quantity (SPQ): Minimum order quantity 10 front handles or a multiple thereof

NOTE

- Please order panhead screws separately

FRONT HANDLE, MULTI-PART, WIDTH 12 MM

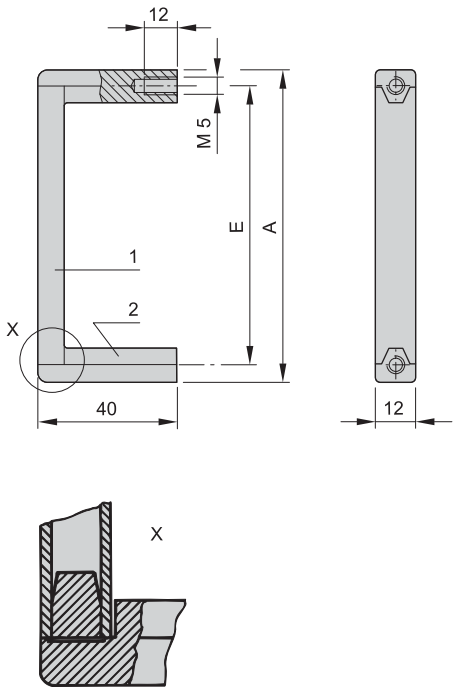

A3-227

- Static load-carrying capacity 10 kg/pair
- In three parts, middle section in Al extrusion, end pieces in glass fibre reinforced plastic
- Bolts on from front

DELIVERY COMPRISES (kit)

Item	Qty	Description
1	1	Front handle, AL extrusion, anodised
2	2	End piece, PA, black

ORDER INFORMATION

Height U	A mm	E mm	Part no.
3	102	88	**10502-057**
4	134	120	**10502-059**
5	194	180	**10502-063**
6	249	235	**10502-065**
Accessories			
Panhead screw pozidrive self-locking, M5 × 12, zinc-plated, PU 100 pieces			**21100-788**

Delivery is exclusively in Standard Pack Quantity (SPQ): Minimum order quantity 10 front handles or a multiple thereof

NOTE

- Please order panhead screws separately

19" FRONT PANELS



- Al anodised, colours light grey (RAL 7035) or black grey (RAL 7021)

DELIVERY COMPRISES

Item	Qty	Description
1	1	19" front panel, Al, 3 mm/4 mm

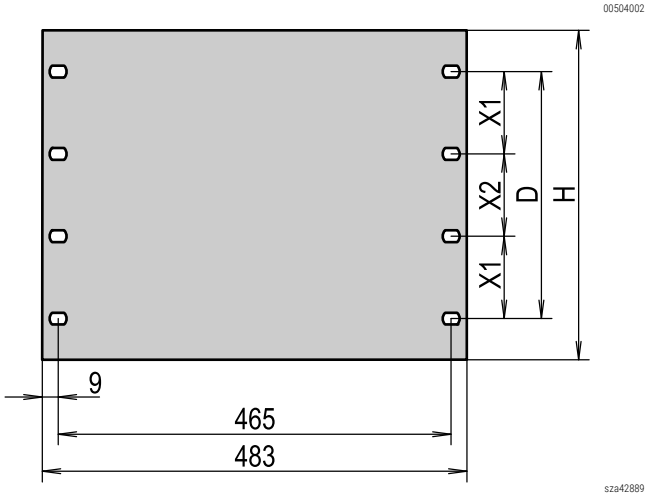

ORDER INFORMATION

Height	H	D	X1	X2	Mounting holes	3 mm thick, RAL 7021	3 mm thick, RAL 7035	3 mm, Al anodised, cut edges plain	4 mm, Al anodised
U	mm	mm	mm	mm	pieces	Part no.	Part no.	Part no.	Part no.
1	43.6	31.7	–	–	4	**30118-948**	**30118-299**	**30219-098**	**40304-074**
2	88.1	76.2	–	–	4	**30118-949**	**30118-301**	**30219-101**	**40304-075**
3	132.5	57.1	–	–	4	**30118-950**	**30118-302**	**30219-104**	**40304-076**
4	177.0	101.6	–	–	4	**30118-951**	**30118-303**	**30219-107**	**40304-077**
5	221.4	146.0	–	–	4	**30118-952**	**30118-304**	**30219-110**	**40304-078**
6	265.9	190.4	–	–	4	**30118-953**	**30118-305**	**30219-113**	**40304-079**
7	310.3	234.9	88.9	57.1	8	**30118-954**	**30118-306**	**30219-137**	**40304-080**
8	354.8	279.4	101.6	76.2	8	**30118-955**	**30118-307**	**30219-138**	**40304-081**
9	399.2	323.8	101.6	120.6	8	**30118-956**	**30118-308**	**30219-143**	**40304-082**
10	443.7	368.3	101.6	165.1	8	**30118-957**	**30118-309**	**30219-144**	**40304-083**

Delivery: supplied loose with cabinet or frame **Part no./35**

NOTE

- 19" assembly kit see page 3.17

CLIP-ON 19" PLASTIC FRONT PANELS



00507003



00507004

- Simple fitting by clipping onto the 19" plane
- Attractive design
- Two colors: light gray or black
- 6 U front panels can be snapped off in 1, 2 or 3 U increments without tools

DELIVERY INCLUDES

Item	Qty	Description
1	10	Clip-on 19" plastic front panels, ABS, antistatic, UL 94 V-0

ORDER INFORMATION

Height U	Height mm	Description	Part No.
1	43.6	black	**D19BPT1RU**
1	43.6	light grey	**87927991**
2	88.1	black	**D19BPT2RU**
2	88.1	light grey	**87927992**
6	270.0	black	23130-622
6	270.0	light grey	23130-623
Delivery: supplied loose with cabinet or frame			**Part no./35**

Part number in bold face type: ready for despatch within 2 working days
Part number in normal type: ready for despatch within 10 working days

19" VENTED FRONT PANEL



00504005

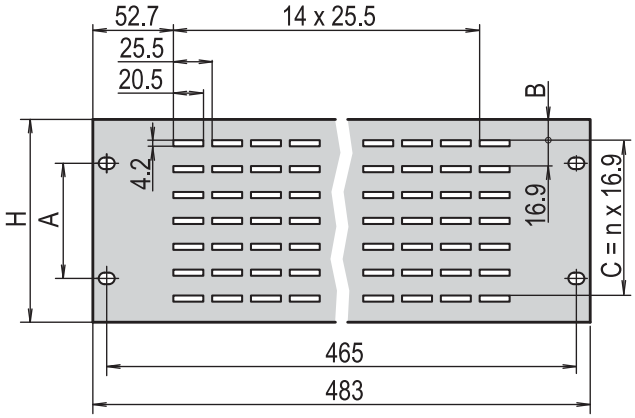

00502509

- Al anodised, Al untreated, light grey (RAL 7035) or black grey (RAL 7021)

DELIVERY COMPRISES

Item	Qty	Description
1	1	19" vented front panel, Al, 2.5 mm

NOTE

- 19" assembly kit see page 3.17

ORDER INFORMATION

Height U	H mm	A mm	B mm	C mm	RAL 7021 Part no.	RAL 7035 Part no.	Al anodised Part no.	Al untreated Part no.
1	43.6	31.7	11.2	16.9	**30118-962**	**30702-056**	**30702-047**	**30702-044**
2	88.1	76.2	16.6	50.7	**30118-963**	**30702-057**	**30702-048**	**30702-045**
3	132.5	57.1	13.5	101.4	**30118-964**	**30702-058**	**30702-049**	**30702-046**
Delivery: supplied loose with cabinet or frame								**Part no./35**

19" VENTED FRONT GRILLE, 2 U



02892009

DELIVERY COMPRISES (kit)

Item	Qty	Description
1	1	Front grille, plastic, black
2	1	Filter
3	1	Retention bracket, St, 1 mm, hot-dip aluminized

ORDER INFORMATION

Description	Part no.
19" vented front grille, 2 U	**60715-049**
Accessories	
Replacement filter for 19" vented front grille 2 U, PU 3 pieces	**60715-050**
Delivery: supplied loose with cabinet or frame	**Part no./35**

NOTE

- 19" assembly kit see page 3.17

19" FRONT PANEL FOR CABLE EYES



00509001

- 19" front panel to accommodate cable eyes (to mount the eyes, insert and rotate them 45°)

DELIVERY COMPRISES

Item	Qty	Description
1	1	19" front panel, 1 U, St, 1.5 mm

ORDER INFORMATION

Height H U	Height H mm	RAL 7021 Part no.	RAL 7035 Part no.
1	43.6	**20118-762**	**20118-761**
Delivery: supplied loose with cabinet or frame			**Part no./35**

NOTE

- Please order cable eyes separately
- 19" assembly kit, see page 3.17



00506020

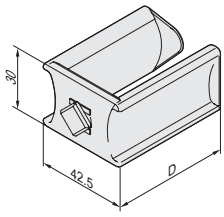

41804050

Plastic cable eyes mounted on 19" front panel

PLASTIC CABLE EYE

- Simple to fit cable eyes: insert and rotate them 45°

ORDER INFORMATION

Plastic cable eye	Part no.
Depth D = 55 mm, with clip, PU 5 pieces	**60118-458**
Depth D = 100 mm, with clip, PU 5 pieces	**60118-459**
Delivery: supplied loose with cabinet or frame	**Part no./35**



00506019

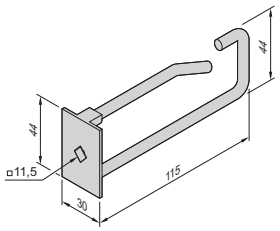

00506050

Steel cable eyes mounted on 19" front panel

STEEL CABLE EYE

- Simple to fit cable eyes: insert and rotate them 45°

ORDER INFORMATION

Steel cable eye	Part no.
Round steel 5 mm, width 44 mm, depth 115 mm, PU 5 pieces	**60118-457**
Delivery: supplied loose with cabinet or frame	**Part no./35**



00509005

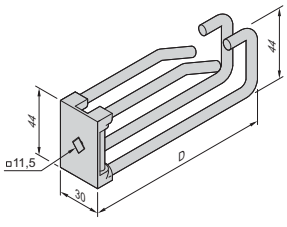

00509050

Rubber pad mounted on double steel cable eyes

DOUBLE STEEL CABLE EYE

- Simple to fit cable eyes: insert and rotate them 45°

ORDER INFORMATION

Double steel cable eye	Part no.
Round steel 5 mm, width 44 mm, depth D = 80 mm, PU 5 pieces	**60118-473**
Round steel 5 mm, width 44 mm, depth D = 115 mm, PU 5 pieces	**60118-474**
Accessories	
Rubber pad for double steel cable eye for depth D = 80 mm, PU 5 pieces	**60118-475**
Rubber pad for double steel cable eye for depth D = 115 mm, PU 5 pieces	**60118-476**
Delivery: supplied loose with cabinet or frame	**Part no./35**

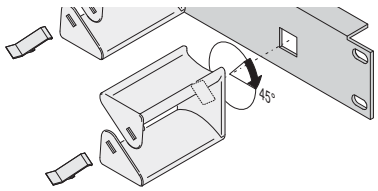

41806051

To fix cable eye to front panel: insert and rotate it 45° (example with plastic cable eye)

Part number in bold face type: ready for despatch within 2 working days
Part number in normal type: ready for despatch within 10 working days

19" FRONT PANEL WITH CABLE DUCTING AND CABLE THROUGH DUCTING



00506016

DELIVERY COMPRISES

Item	Qty	Description
1	2	19" front panel with integrated cable ducting, St, 1.5 mm, 78 mm deep

ORDER INFORMATION

Height U	Height mm	Description	RAL 7035 Part no.	RAL 7021 Part no.
1	43.6	2 oval cable ducting openings, 150 x 32 mm	**20118-757**	**20118-758**
2	88.1	2 oval cable ducting openings, 150 x 76 mm	**20118-759**	**20118-760**
Delivery: supplied loose with cabinet or frame				**Part no./35**

NOTE

- 19" assembly kit, see page 3.17

19" CABLE THROUGH DUCTING



01696006

- Mounting height 1 U or 2 U

DELIVERY COMPRISES

Item	Qty	Description
1	2	19" cable ducting, St, 1.5 mm

ORDER INFORMATION

Height U	Height mm	Description	RAL 7021 Part no.	RAL 7035 Part no.
1	43.6	Cable ducting opening 27.5 x 438 mm	**20118-767**	**20118-734**
2	88.1	Cable ducting opening 72.0 x 438 mm	**20118-768**	**20118-736**
Delivery: supplied loose with cabinet or frame				**Part no./35**

NOTE

- 19" assembly kit see page 3.17

19" CABLE DUCTING WITH BRUSH STRIP



01604007

Illustration shows silver anodized

- Mounting height 1 U
- No threading necessary
- Color in silver or black

DELIVERY INCLUDES

Item	Qty	Description
1	2	Al-profile, anodized with brush strip (plastic, black), pressed, color see ordering information

ORDER INFORMATION

Description	Part No.
Silver anodised	**60118-437**
Black anodised	64230-096
Delivery: supplied loose with cabinet or frame	**Part no./35**

NOTE

- 19" assembly kit see page 3.17

19" CABLE TRAY, 2 U

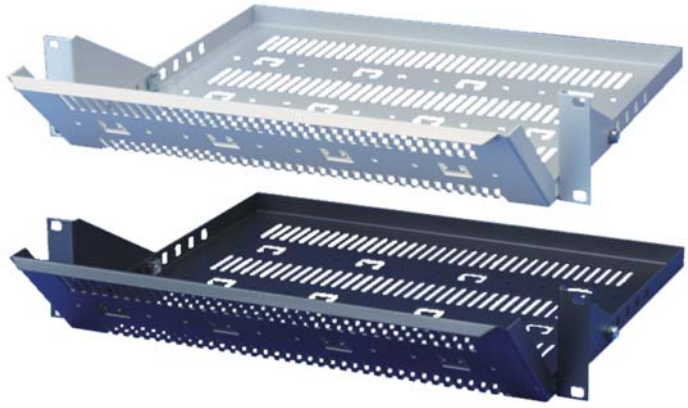

00507001

- Load-carrying capacity 15 kg
- Installation height 2 U
- Depth adjustable in 25 mm grid increments, forward protrusion min. 91 mm, max. 191 mm

DELIVERY COMPRISES (Kit)

Item	Qty	Description
1	1	19" cable tray, 2 U, St, 1.5 mm
2	2	Mounting bracket, St, 1.5 mm

ORDER INFORMATION

Width mm	Depth mm	RAL 7021 Part no.	RAL 7035 Part no.
430	450	**20118-795**	**20118-794**
Delivery: supplied loose with cabinet or frame			**Part no./35**

NOTE

- 19" assembly kit see page 3.17

Part number in bold face type: ready for despatch within 2 working days
Part number in normal type: ready for despatch within 10 working days

CABLE MANAGER, HORIZONTAL



40011010

Front



40011006

Front and rear

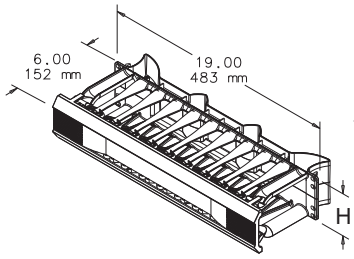

89073653

Front

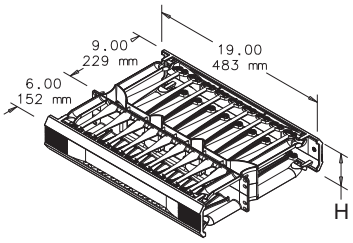

89073654

Front and rear

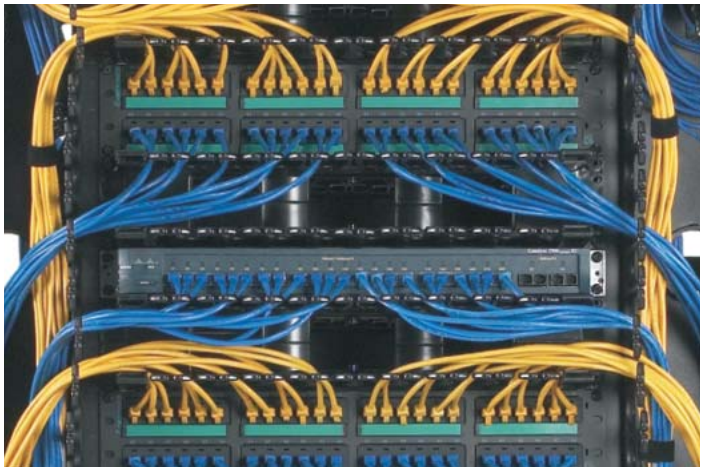

40011009

Application

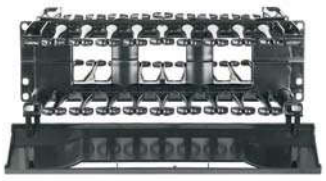

40011007

Cable manager with hinged cover



40011008

Top view, cable manager with cable fingers front and rear

- Excellent horizontal cable ducting for large cable volumes
- The cables are held with robust, rounded cable fingers
- Quick access to cables (cover hinges upwards, downwards or comes off completely)
- Simple to fit: clip in then screw down
- 1 and 2 U versions
- Versions for front and rear cable routing
- Optimal cabling from horizontal to vertical

DELIVERY COMPRISES

Item	Qty	Description
1	1	Cable manager, plastic, black
2	1	Fitting material with user manual

ORDER INFORMATION

Description	Height H		Width	Depth	Part no.
	U	mm	mm	mm	
Front	1	44,5	483.00	152 mm	**DCHS1**
Front	2	88,9	483.00	152 mm	**DCHS2**
Front and rear	2	88,9	483.00	229 mm + 152 mm	**DCHD2**

NOTE

- 19" assembly kit see page 3.17

19" EQUIPMENT SHELF, 1 U



00508007

- Static load-carrying capacity 5 kg
- Mounting height 1 U

DELIVERY COMPRISES

Item	Qty	Description
1	1	Equipment shelf, St, 1.5 mm

ORDER INFORMATION

Width mm	Depth mm	AlZn Part no.	RAL 7021 Part no.	RAL 7035 Part no.
447	390	**20118-781**	**20118-782**	**20118-783**
Delivery: supplied loose with cabinet or frame				**Part no./35**

- 19" assembly kit, see page 3.17

19" EQUIPMENT SHELF, 2 U



00508003

- Static load-carrying capacity 10 kg
- Mounting height 2 U

DELIVERY COMPRISES

Item	Qty	Description
1	1	Equipment shelf, St, 1.5 mm

ORDER INFORMATION

Width mm	Depth mm	RAL 7021 Part no.	RAL 7035 Part no.
447	238	**20118-784**	**20118-785**
Delivery: supplied loose with cabinet or frame			**Part no./35**

- 19" assembly kit, see page 3.17

19" EQUIPMENT SHELF, DEPTH-ADJUSTABLE, 2 U



00508010

- Static load-carrying capacity 15 kg
- Installation height 2 U
- Depth adjustable in 25 mm grid increments, forward protrusion min. 26 mm

DELIVERY COMPRISES (kit)

Item	Qty	Description
1	1	Equipment shelf, St, 1.5 mm
2	2	Mounting bracket with assembly kit, St, 1.5 mm

ORDER INFORMATION

Width mm	Depth mm	RAL 7021 Part no.	RAL 7035 Part no.
430	250	**20118-786**	**20118-789**
430	300	**20118-787**	**20118-790**
430	400	**20118-788**	**20118-791**
Delivery: supplied loose with cabinet or frame			**Part no./35**

- 19" assembly kit, see page 3.17

Part number in bold face type: ready for despatch within 2 working days
Part number in normal type: ready for despatch within 10 working days

19" SHELF, STATIONARY, DEPTH-ADJUSTABLE, 1 U



40011016

Shelf with variable mounting dimensions

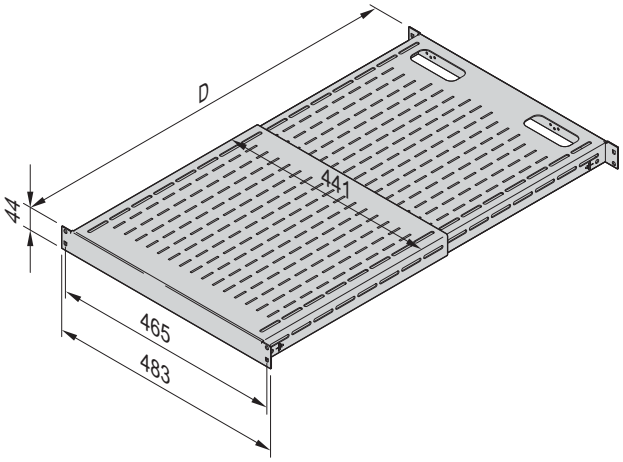

89073664

- Static load-carrying capacity 68 kg
- Mounting height 1 U
- For mounting on four 19" posts or four 19" panel/slide mounts
- Variable mounting dimensions (depth-adjustable from 19" angle to 19" angle)
- 2 versions
  - Mounting dimensions 495 ... 851 mm
  - Mounting dimensions 792 ... 1151 mm
- 2 oval cut-outs for cable ducting
- Colour black, RAL 9005

DELIVERY COMPRISES

Item	Qty	Description
1	1	Shelf, depth-adjustable, width 19", RAL 9005 (black); shelf is suspended on 19" upright or 19" panel/slide mount
2	1	Fitting material with user manual

ORDER INFORMATION

19" shelf, stationary, depth-adjustable, 1 U	Part no.
Mounting dimensions D 495 ... 851 mm	**D19FVT69B**
Mounting dimensions D 792 ... 1151 mm	**D19FVT912B**

NOTE

- 19" assembly kit see page 3.17

19" DRAWER



00506009

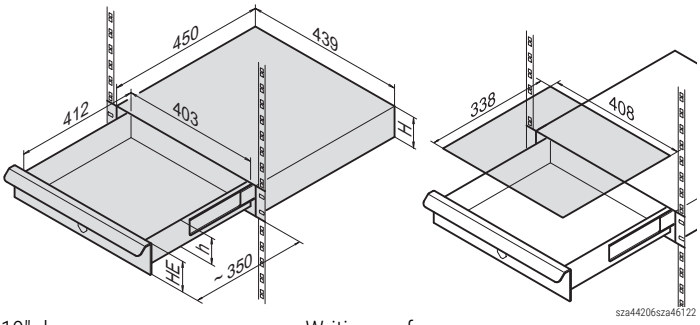

19" drawer

Writing surface

- Height 1, 2 or 3 U
- Static load-carrying capacity 15 kg
- Optional writing surface

DELIVERY COMPRISES ((assembled))

Item	Qty	Description
1	1	19" drawer with lock (2 keys)
2	1	Assembly kit

ORDER INFORMATION

Height H		Height h	Front panel anodised	Front panel RAL 7021	Front panel RAL 7035
U	mm	mm	Part no.	Part no.	Part no.
1	41.6	30	**20110-061**	**20110-180**	**20110-054**
2	86.0	73	**20110-062**	**20110-181**	**20110-055**
3	130.5	117	**20110-063**	**20110-182**	**20110-056**
Accessories					
Writing surface for 19" drawer St, 1 mm, RAL 7035, 1 piece					**20110-060**
Delivery: supplied loose with cabinet or frame					**Part no./35**

Part number in bold face type: ready for despatch within 2 working days
Part number in normal type: ready for despatch within 10 working days

19" DISTRIBUTION FIELD, CAT 6



01604002

Distribution field Cat 6

- 1 U distribution field with 24 x RJ45 ports
- For use in communications networks, in accordance with ISO/IEC 11801 (as at 03/95)
- Meets the specifications for EN 50 173 (as at 07/95)
- Easy to fit thanks to dual insulation displacement technique (LSA+/110)
- Case can be opened and closed without tools, with quick-release fastener

DELIVERY COMPRISES (assembled)

Item	Qty	Description
1	1	19" case, shielded, St, RAL 7035, 1 U, with earthing stud
2	3	Backplanes with 8 x dual insulation displacement technique for AWG 22--24 cables and 8 x RJ45 sockets
3	24	Cable ties

ORDER INFORMATION

Description	Part no.
19'' distribution field, Cat 6	**60118-435**
Delivery: supplied loose with cabinet or frame	**Part no./35**

NOTE

- 19" assembly kit see page 3.17

DOCUMENT POCKET



00506004 00506005

Steel, DIN A4 Plastic, DIN A4



00506006

Plastic, DIN A3

- For storage of documents and circuit diagrams
- Assembly with double sided adhesive tape

DELIVERY COMPRISES

Item	Qty	Description
1	1	Document pocket
2	1	Adhesive tape

ORDER INFORMATION

Description	Dimensions H x W x D mm	Part no.
Steel, DIN A4, RAL 7035	180 x 336 x 34	**21126-271**
Plastic, DIN A4, grey	195 x 356 x 21	**60100-302**
Plastic, DIN A3, grey	305 x 305 x 25	**ADP2**
Delivery: supplied loose with cabinet or frame		**Part no./35**

19" MOUNTING TRAY FOR LSA+

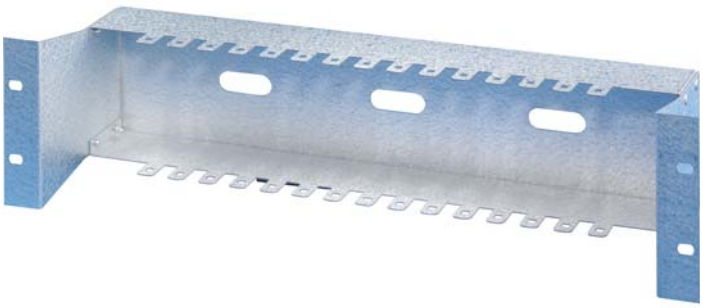

00506008

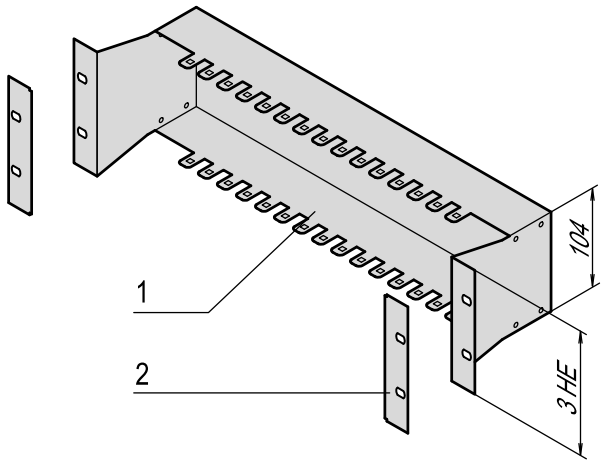

VTA45668

- Mounting height 3 U
- For retention of up to 15 LSA+ guide rails

DELIVERY COMPRISES (kit)

Item	Qty	Description
1	1	19" mounting tray, St, 1.5 mm, finish AlZn
2	2	Flange cover, Al, anodised

ORDER INFORMATION

Description	Part no.
19" mounting tray for LSA+	**21493-079**
Delivery: supplied loose with cabinet or frame	**Part no./35**

NOTE

- 19" assembly kit see page 3.17

19" MOUNTING BRACKET



00506007

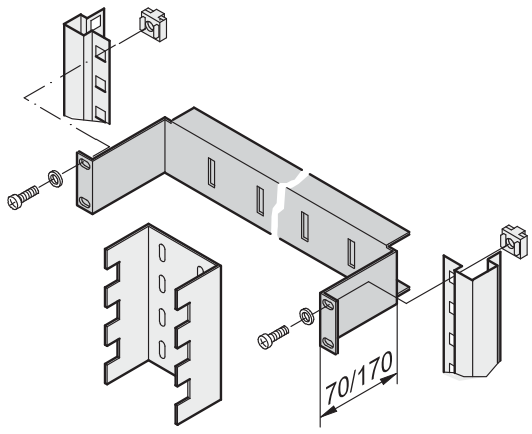

SC30

- Mounting height 1 U
- For fixing cable channels and system rails (e.g. LSA+ or Infra+)
- Mounting plane set back by optionally 70 or 170 mm relative to the 19" plane

DELIVERY COMPRISES

Item	Qty	Description
1	1	19" mounting bracket, St, 1.5 mm, RAL 7035

ORDER INFORMATION

Description	Depth mm	Part no.
19" mounting bracket	70	**30118-802**
19" mounting bracket	170	**30118-803**
Delivery: supplied loose with cabinet or frame		**Part no./35**

NOTE

- 19" assembly kit see page 3.17

Part number in bold face type: ready for despatch within 2 working days
Part number in normal type: ready for despatch within 10 working days

19" MODULE SUPPORT, 3 U

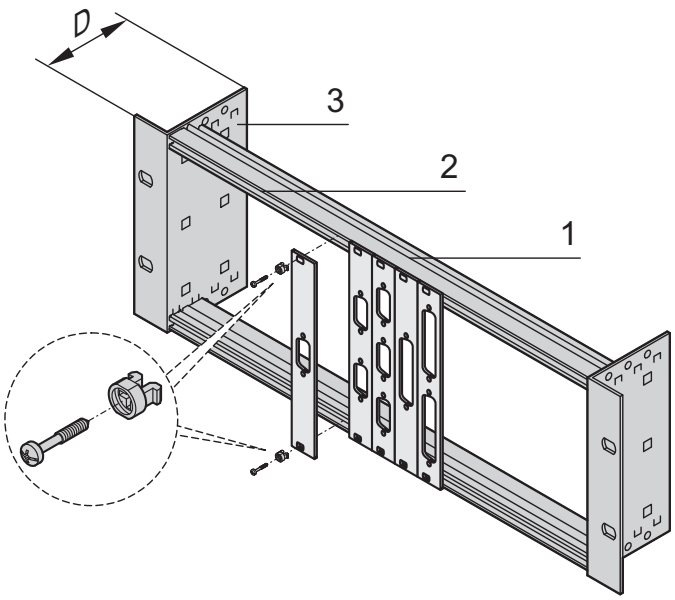

00508057

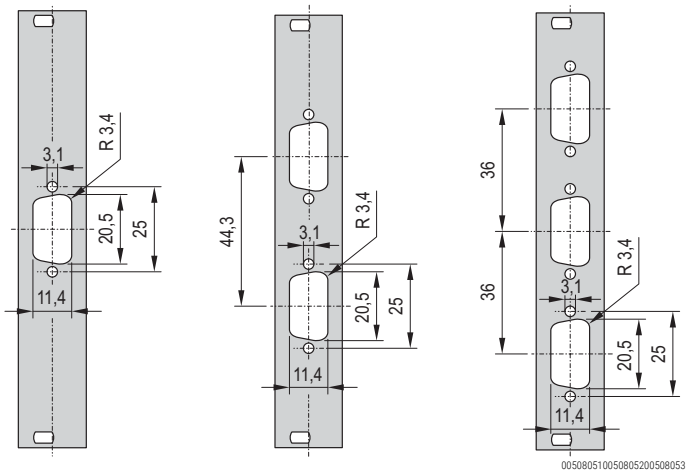

00508051005080520050805 3

Front panel Sub-D 9-pin

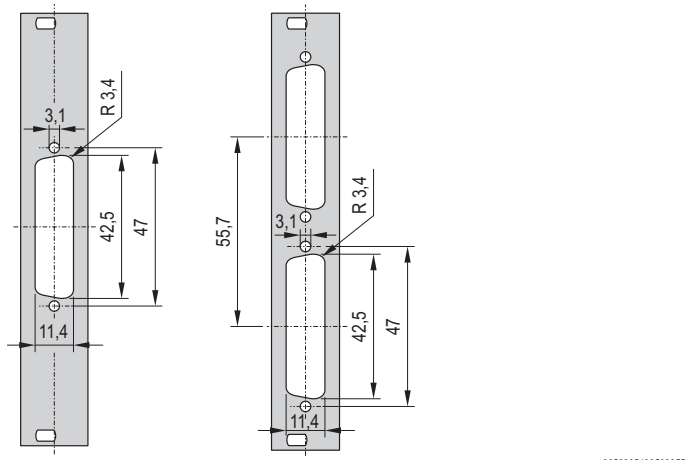

0050805400508055

Front panel Sub-D 25-pin

- For assembly of partial width front panels with SUB-D-, ST type 3 or FDDI cut-outs
- Available in two versions
  - without strain relief rail
  - with strain relief rail
- Optional front panels, Al, 2.5 mm, RAL 7035

DELIVERY COMPRISES (kit)

Item	Qty	Description
1	1	19" module support, 3 U, Al
2	2	Threaded inserts with thread M2.5
3	2	Gland plate, St, 1 mm, RAL 7035
4	1	Strain relief rail, St, 1.5 mm, RAL 7035 (only for version with strain relief)
5	1	Assembly kit

ORDER INFORMATION

Description	Height U	Depth D mm	Part no.
19" module support without strain relief	3	40	**20118-630**
19" module support with strain relief	3	115	**20118-631**
Accessories			
Front panel 3 U, 4 HP, 1 piece			**30118-328**
Front panel 3 U, 7 HP, 1 piece			**30118-329**
Front panel 3 U, 14 HP, 1 piece			**30118-330**
Front panel 3 U, 28 HP, 1 piece			**30118-331**
Front panel Sub-D 9-pin 3 U, 4 HP, cut-out 1 x 9-pin, 1 piece			**30118-338**
Front panel Sub-D 9-pin 3 U, 4 HP, cut-out 2 x 9-pin, 1 piece			**30118-336**
Front panel Sub-D 9-pin 3 U, 4 HP, cut-out 3 x 9-pin, 1 piece			**30118-332**
Front panel Sub-D 25-pin 3 U, 4 HP, cut-out 1 x 25-pin, 1 piece			**30118-334**
Front panel Sub-D 25-pin 3 U, 4 HP, cut-out 2 x 25-pin, 1 piece			**30118-335**
Quick release fastener for front panel assembly, PU 100 pieces			**21100-586**
Delivery: supplied loose with cabinet or frame			**Part no./35**

NOTE

- Please order front panels or quick-release fastener separately
- 19" assembly kit, see page 3.17

19" ASSEMBLY KIT M6

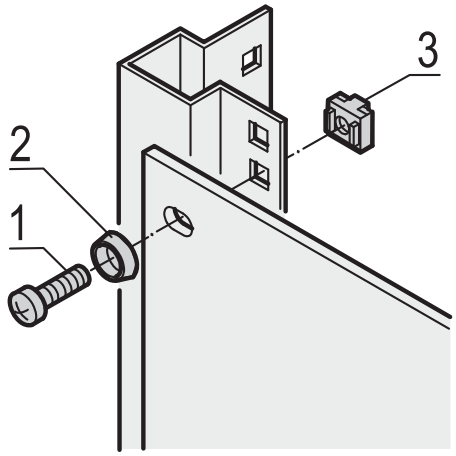

sc128

Without GND/earthing

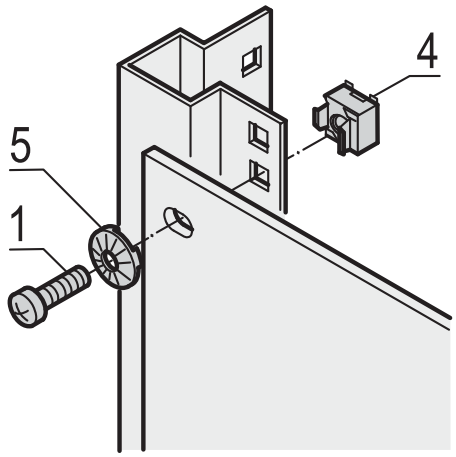

00504053

With GND/earthing

- For mounting of front panels, distribution fields or other components on the frame, slide mounts or depth members with square cut-outs
- For standard GND/earthing use a GND/earthing nut and a nomel washer on at least one attachment point

DELIVERY COMPRISES

Item	Description
1	Panhead screw, M6 x 16, St, zinc-plated
2	Plastic washer, black
3	Cage nut, M6, St, zinc-plated
4	GND/earthing cage nut, M6, St, zinc-plated
5	Nomel washer, St, zinc-plated, internal diameter 6.1 mm, external diameter 12.2 mm

ORDER INFORMATION

Item	Description	Qty/PU	Part no.
1+2+3	19" assembly kit (screw, washer, nut)	4	**21190-095**
1+2+3	19" assembly kit (screw, washer, nut)	32	**21190-435**
1+2+3	19" assembly kit (screw, washer, nut)	50	**21101-809**
1+2+3	19" assembly kit (screw, washer, nut)	100	**21101-810**
1	Panhead screw M6, zinc-plated	50	**21100-021**
1	Panhead screw M6, zinc-plated	100	**21100-022**
1	Panhead screw M6, zinc-plated, black	100	**21100-650**
2	Plastic washer	50	**21100-015**
2	Plastic washer	100	**21100-016**
3	Cage nut M6	50	**21100-003**
3	Cage nut M6	100	**21100-004**
4	GND/earthing cage nut M6	10	**21120-131**
4	GND/earthing cage nut M6	100	**21120-132**
5	Nomel washer for GND/earthing, M6	100	**21101-173**
Delivery: supplied loose with cabinet or frame			**Part no./35**

Part number in bold face type: ready for despatch within 2 working days
Part number in normal type: ready for despatch within 10 working days

CAGE NUT M4/M5

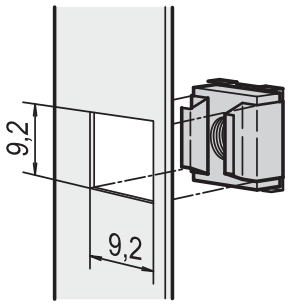

bza42733

Cage nut

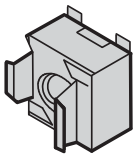

00503050

GND/earthing cage nut

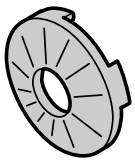

00502512

Nomel washer

- For assembly of special parts (in square holes), which require a thread diameter of M4 or M5
- For standard GND/earthing use a GND/earthing nut and a nomel washer on at least one attachment point

ORDER INFORMATION

Description	Description	Qty/PU	Part no.
Cage nut M4	St, zinc-plated, for material thickness of 1.8 to 2.6 mm	50	**21100-001**
Cage nut M4	St, zinc-plated, for material thickness of 1.8 to 2.6 mm	100	**21100-002**
GND/earthing cage nut M4	St, zinc-plated, for material thickness 1.8 to 2.6 mm	10	**21120-127**
GND/earthing cage nut M4	St, zinc-plated, for material thickness 1.8 to 2.6 mm	100	**21120-128**
Nomel washer M4 for GND/earthing	St, zinc-plated, inner diameter 4.1 mm, external diameter 8 mm	100	**21120-148**
Cage nut M5	St, zinc-plated, for material thickness of 1.8 to 2.6 mm	50	**21100-215**
Cage nut M5	St, zinc-plated, for material thickness of 1.8 to 2.6 mm	100	**21100-216**
GND/earthing cage nut M5	St, zinc-plated, for material thickness 1.8 to 2.6 mm	10	**21120-129**
GND/earthing cage nut M5	St, zinc-plated, for material thickness 1.8 to 2.6 mm	100	**21120-130**
Nomel washer M5 for GND/ earthing	St, zinc-plated, inner diameter 5.1 mm, external diameter 10.2 mm	100	**21120-149**
Delivery: supplied loose with cabinet or frame			**Part no./35**

SQUARE NUT M6

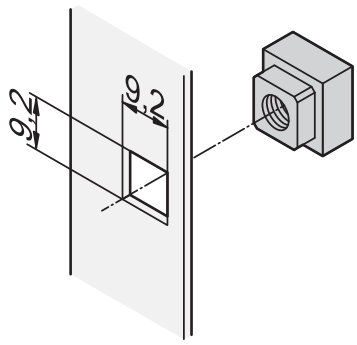

bza42735

Square nut

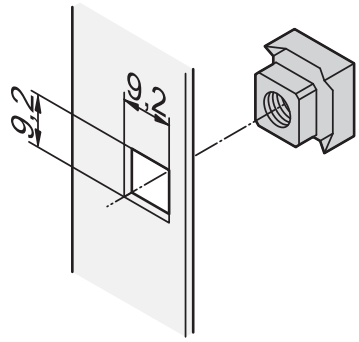

06704051

Square GND/earthing nut

- For precise, anti-twist secure mounting without clearance
- For standard GND/earthing use a square GND/earthing nut and a nomel washer on at least one attachment point

ORDER INFORMATION

Description	Description	Qty/PU	Part no.
Square nut M6	St, zinc-plated, for material thickness of 3.7 mm	50	**21100-558**
Square nut M6	St, zinc-plated, for material thickness of 3.7 mm	100	**21101-007**
Square GND/earthing nut M6	St, zinc-plated, for material thickness of 1.5 mm	50	**21101-172**
Square GND/earthing nut M6	St, zinc-plated, for material thickness of 3.5 mm	50	**21101-171**
Nomel washer for GND/earthing, M6	St, zinc-plated, inner diameter 6.1 mm, external diameter 12.2 mm	100	**21101-173**
Delivery: supplied loose with cabinet or frame			**Part no./35**

MOUNTING AID FOR CAGE NUTS

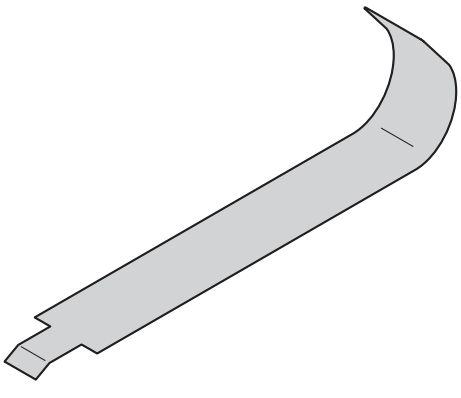

06708057

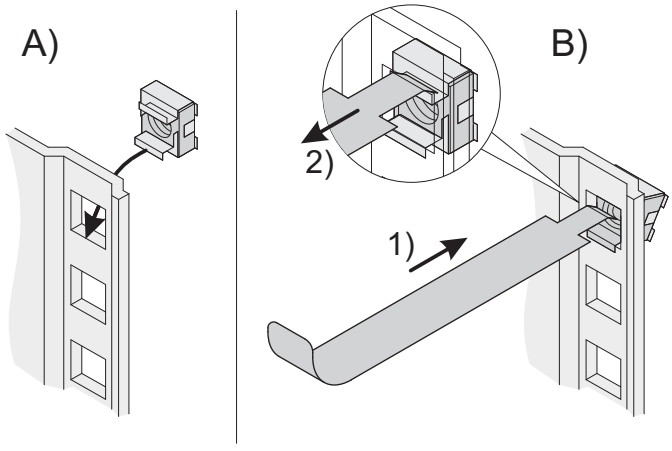

06708056

- To fit/remove cage nuts

ORDER INFORMATION

Description	Qty/PU	Part no.
Mounting aid for cage nuts	1	**21127-990**
Delivery: supplied loose with cabinet or frame		**Part no./35**

Part number in bold face type: ready for despatch within 2 working days
Part number in normal type: ready for despatch within 10 working days

SANDWICH CABLE CLAMPING FOR C PROFILES

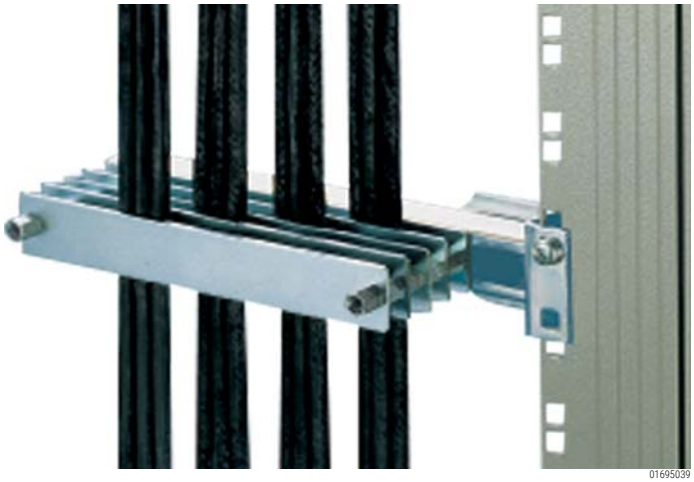

- Cable ducting in up to 5 planes
- For cable diameter of 4 ... 7 mm, usable width 190 mm

DELIVERY COMPRISES (Kit)

Item	Qty	Description
1	6	Pressure plate, 15 x 250 mm, St, 2.5 mm, chromated and zinc-plated, bolt spacing 200 mm
2	10	Rubber strip
3	10	Spacer M6 for cable diameter of 4 ... 7 mm
4	1	Assembly kit

ORDER INFORMATION

Description	Part no.
Sandwich cable clamping for C profiles	**20118-740**
Delivery: supplied loose with cabinet or frame	**Part no./35**

CABLE TIES

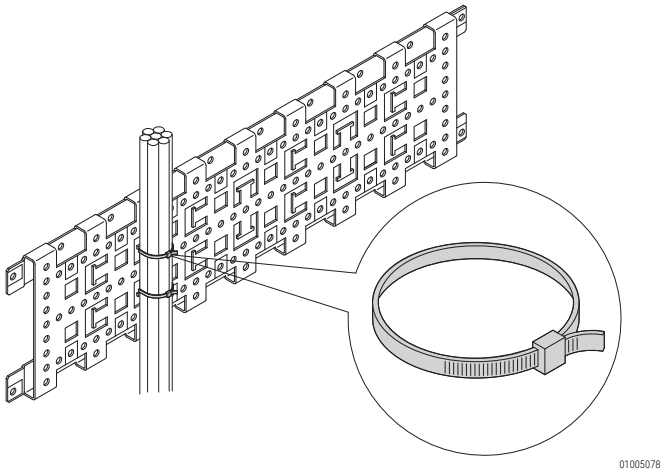

DELIVERY COMPRISES

Item	Qty	Description
1	25	Cable tie, plastic

ORDER INFORMATION

Description		Part no.
Cable ties	186 mm x 5 mm	**20118-352**
Cable ties	360 mm x 5 mm	**20118-353**
Cable ties	92 mm x 2.5 mm	**20118-351**
Delivery: supplied loose with cabinet or frame		**Part no./35**

VELCRO

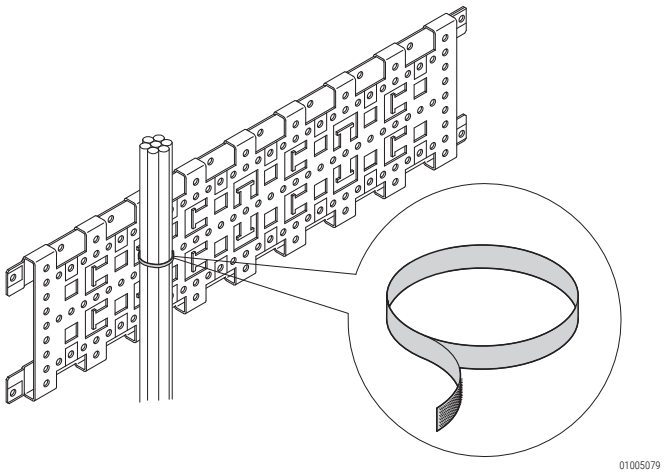

- Length 300 mm (for cable bundles of max. 90 mm diameter)

ORDER INFORMATION

Description	Part no.
Velcro strip, Polyethylen/Polyamide, black, length 300 mm, PU 10 pieces	**20118-624**
Delivery: supplied loose with cabinet or frame	**Part no./35**

CABLE SUPPORT



00592015

Cable support with return spring



00592016

Cable support without return spring

- For cable support on pull-out devices and chassis
- Cable fixing with cable ties
- 2 versions:
  - Cable support **with** return spring for a uniform cabling matched to the extraction movements
  - Cable support **without** return spring, connected directly to pull-out part

ORDER INFORMATION

Description	Qty/PU	Part no.
Cable support **with** return spring	1	**20118-729**
Cable support **without** return spring	1	**20118-706**
Accessories		
Cable ties 92 mm x 2.5 mm, PU 25 pieces		**20118-351**
Delivery: supplied loose with cabinet or frame		**Part no./35**

TECHNICAL DATA

	Cable support with return spring	Cable support without return spring
Load-carrying capacity	2 kg	5 kg
Extension length	730 mm	720 mm
Space requirement in retracted position	25 mm	25 mm
Material	St, square tube, 16 mm^2, zinc-plated	St profile, 1 mm, zinc-plated

NOTE

- 19" assembly kit see page 3.17

CABLE CHANNEL

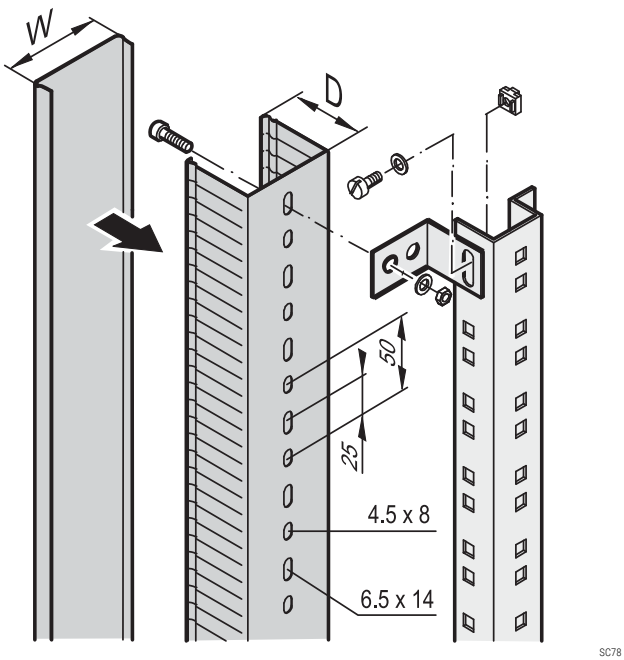

SC78

- For cable ducting in lateral and rear cabinet areas
- For mounting on cabinet uprights, depth members or C-profiles

DELIVERY COMPRISES

Item	Qty	Description
1	1	Cable channel, 2 m, plastic, grey

ORDER INFORMATION

Depth D mm	Width W mm	Length mm	Part no.
60	30	2000	**60103-011**
60	60	2000	**60103-010**
Accessories			
Assembly kit for cable channel (4 brackets, screws, washers, nuts, cage nuts)			**21100-123**
Delivery: supplied loose with cabinet or frame			**Part no./35**

NOTE

- Please order assembly kit for cable channel separately

Part number in bold face type: ready for despatch within 2 working days
Part number in normal type: ready for despatch within 10 working days

SIMPLE TELESCOPIC SLIDE FOR ASSEMBLY OF SUBRACKS IN CABINETS



- For mounting 84 HP wide subracks in the 19" plane
- Loading capacity: 25 kg per pair
- The guiding profile is matched to the fixing dimension in the cabinet (it is bolted to the 19" profile of the cabinet); the adaptor rail is matched to the depth and fixing dimension on the subrack (it is inserted into the guiding profile like a telescopic slide)
- Safety note:
  No protection against extraction, no stop at full extension

TELESCOPIC SLIDES WITH GUIDING PROFILE FOR FITTING IN CABINETS

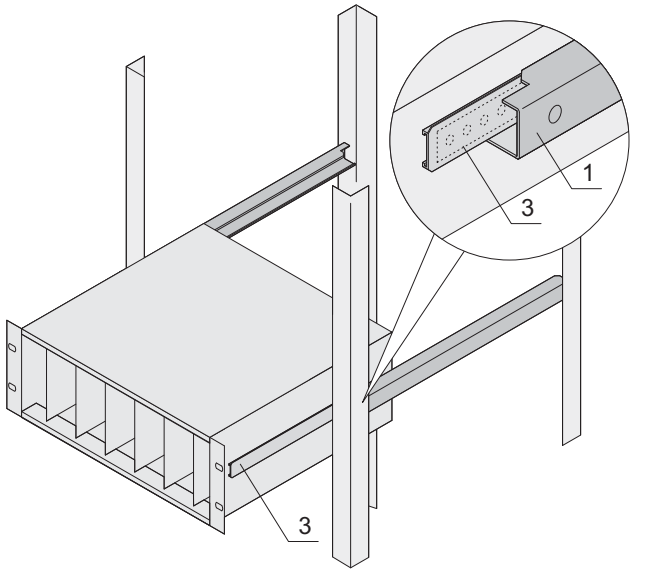

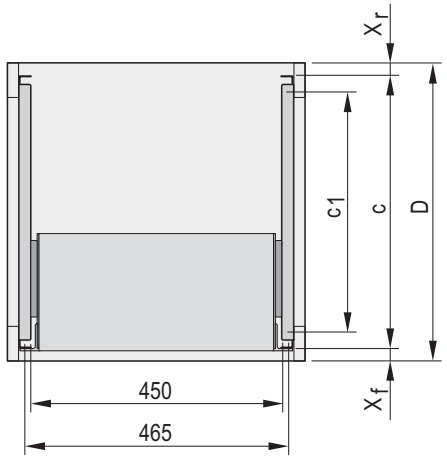

x_f, x_r: Distance of 19" plane to cabinet edge (front, rear)
c: Distance of 19" planes from each other,
c1: Fixing dimension of guiding profile on 19" panel/slide mounts

DELIVERY COMPRISES (kit)

Item	Qty	Description
1	2	C-profile, Al
2	1	Assembly kit

ORDER INFORMATION

For cabinet range	Depth D mm	x_f mm	x_r mm	C mm	c1 mm	Part no.
VARISTAR	600	50	50	500	369	**24562-464**
VARISTAR	800	50	50	700	569	**24562-466**
VARISTAR	900	50	50	800	669	**24562-467**
VARISTAR	1000	50	50	900	769	**24562-468**
VARISTAR	1100	50	50	1000	869	**24562-472**
VARISTAR	1200	50	50	1100	969	**24562-473**
eurorack	600	60	60	480	397	**24562-449**
eurorack	800	60	60	680	597	**24562-451**
eurorack	900	60	60	780	697	**24562-452**
Novastar	500	33	60	407	350	**24562-460**
Novastar	600	33	60	507	450	**24562-461**
Novastar	800	33	60	707	650	**24562-474**
Lab rack	250	0	0	250	162	**24562-446**
Delivery: supplied loose with cabinet or frame						**Part no./35**

NOTE

- Adapter rail see page 3.23

TELESCOPIC SLIDES WITH ADAPTOR RAIL FOR SUBRACKS

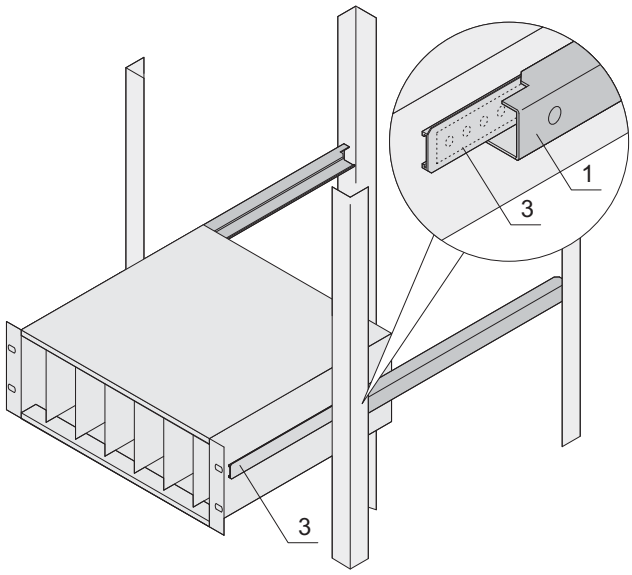

06108072

- The rail serves for fixing the subrack on the guiding profile when mounted into a cabinet

DELIVERY COMPRISES (kit)

Item	Qty	Description
3	2	Al extrusion, incl. M4 threaded insert
4	1	Assembly kit

ORDER INFORMATION

For subrack depth mm	Part no.
175	**24562-453**
235	**24562-454**
295	**24562-455**
355	**24562-456**
415	**24562-457**
475	**24562-458**
Delivery: supplied loose with cabinet or frame	**Part no./35**

NOTE

- Suitable guiding profile see page 3.22

MEASURING TAPE



32506001

- Measuring tape with cm, U-, HP-division (length 2 m)
- Plastic case, metal tape measure with automatic retraction

ORDER INFORMATION

Description	Qty/PU	Part no.
Tape measure	1	**89009-001**

DIMENSIONING OF TELESCOPIC SLIDES

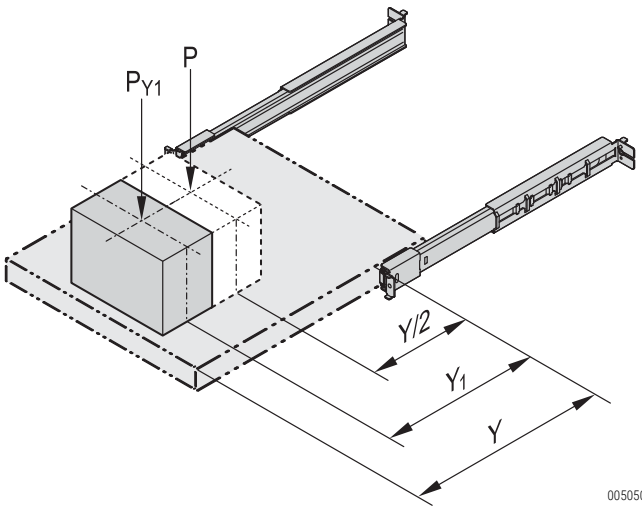

00505053

Calculation of the load-carrying capacity

The stated load-carrying capacity P is valid provided that the centre of gravity is in the centre of the extraction (Y/2).
For a different position of the centre of gravity (Y_1) please use the following formula:
Load-carrying capacity $P(Y_1) = ½ P Y/Y_1$ (but max. P)

Example:
Load-carrying capacity P = 45 kg,
Extension length Y = 250 mm
Position of centre of gravity Y_1 = 150 mm

Result:
$P(Y_1) = ½ P Y/Y_1 = ½ \times 45 kg \times 250/150 = 37.5 kg$

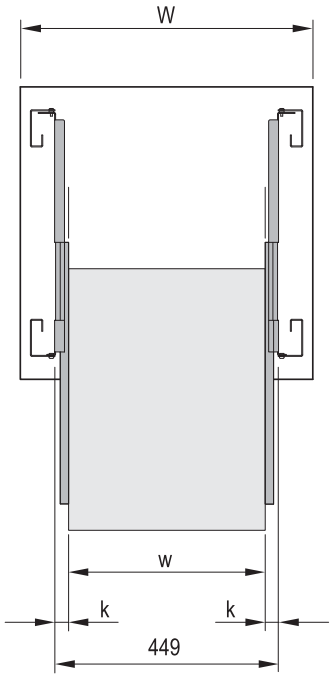

00505060

Calculation of the maximum installation width (w)

For each telescopic slide the maximum installation width (w) for one shelf or drawer is given. This is the maximum clearance available between the telescopic slides when they are fitted in a 19" cabinet.

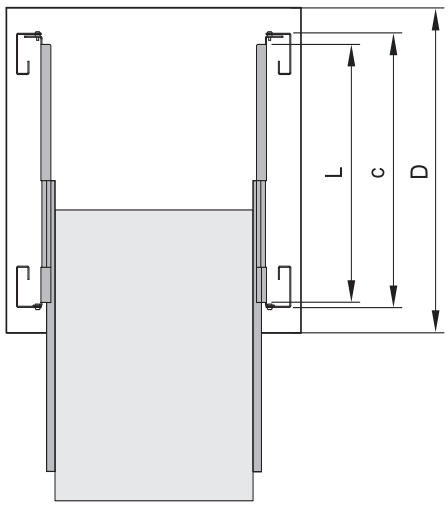

00505061

Mounting on 19" panel/slide mounts

In 19" cabinets, telescopic slides are mounted on the front and rear 19" panel/slide mounts.
The length (L) must therefore be matched with the distance between the 19" brackets (depthwise). For this the required 19" pitch (c) is given for each cabinet.

TELESCOPIC SLIDE, NARROW, FOR SUBRACK



00516001

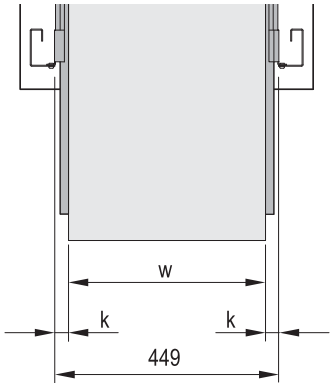

00505060

k = rail width 7.5 mm,
w = max. installation width 84 HP (435 mm)

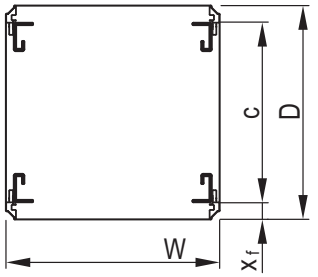

01004146

C dimensions: Varistar 500 mm and 700 mm, Novastar 507 mm to 707 mm

- Suitable for 84 HP width subracks (type F, type H, type L)
- Locks at full extension
- Hinged
- Extension length > 100 %
- Rail width 7.5 mm
- Maximum clear width of extension/drawer w = 84 HP (435 mm)

DELIVERY INCLUDES

Item	Qty	Description
1	2	Telescopic slide, St, zinc-plated

ORDER INFORMATION

Length L mm	Extension length Y mm	Load-carrying capacity P kg	Part no.
356	See table Technical data	15	**60110-441**
559	See table Technical data	15	**60110-440**
Accessories			
Fixing materials kit for Varistar, to mount 2 telescopic slides, PU 1 kit			**21120-193**
Fixing materials kit for Novastar, to mount 2 telescopic slides, PU 1 kit			**21120-194**
Delivery: supplied loose with cabinet or frame			**Part no./35**

Technical data

Length L mm	Extension length Y Varistar SL/HD mm	Novastar SL mm	Novastar HD mm
356	350	362	352
559	553	565	555

NOTE

- To mount on 19" plane please order assembly kit separately

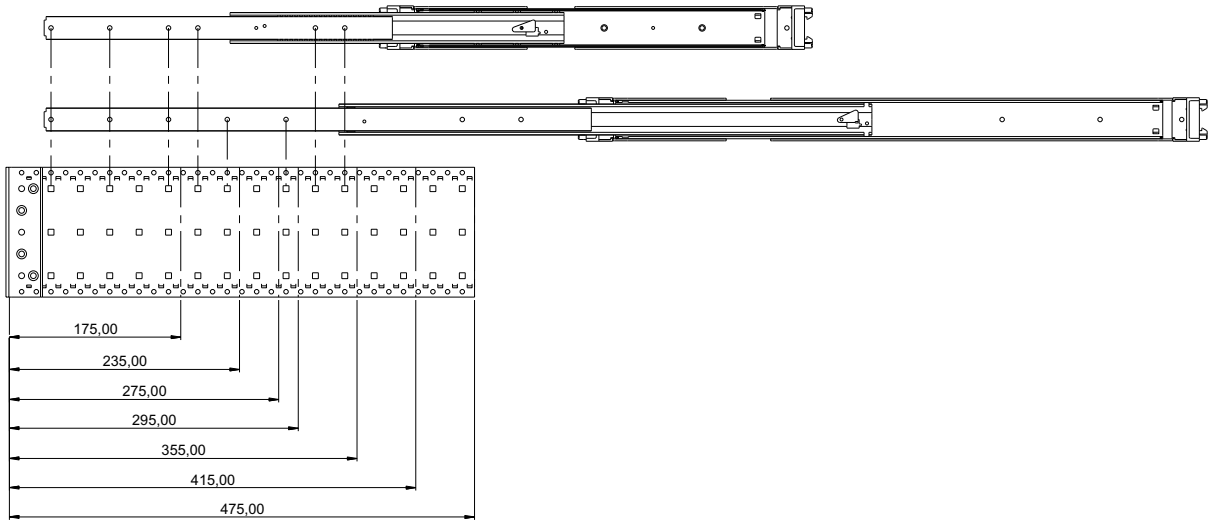

00515050

Screw-on position for telescopic slide on side panel of subrack

Cabinet Accessories–Telescopic slides

UNIVERSAL TELESCOPIC SLIDE, 1 U



- Static load-carrying capacity per pair 23 - 39 kg
- Lateral mounting on the 19" uprights (19" plane remains free for fixing the extension/drawer)
- Can be removed
- Extension length > 100 %
- Rail width k = 9.7 mm,
  max. installation width of extension/drawer w = 429 mm

DELIVERY COMPRISES

Item	Qty	Description
1	2	Telescopic slide, St, zinc-plated

ORDER INFORMATION

Length L mm	Extension length Y mm	Load-carrying capacity P kg	Part no.
356	381	39	**20110-090**
406	432	36	**20110-091**
457	483	34	**20110-092**
508	533	32	**20110-093**
559	584	29	**20110-094**
610	635	27	**20110-095**
660	686	23	**20110-096**
711	737	23	**20110-097**
Accessories			
Assembly kit For VARISTAR, for assembly of 2 telescopic slides, PU 1 kit			**21120-158**
Assembly kit For eurorack, for assembly of 2 telescopic slides, PU 1 kit			**21120-159**
Assembly kit for NOVASTAR, to mount 2 telescopic slides, PU 1 kit			**21120-160**
Delivery: supplied loose with cabinet or frame			**Part no./35**

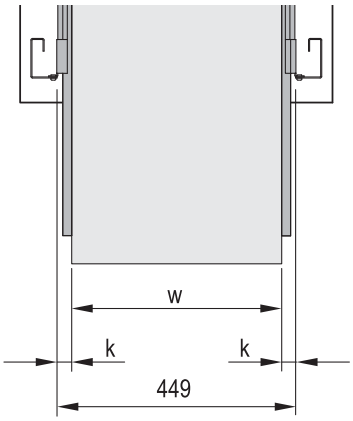

00505011

00505060005055

k = rail width, w = max. installation width

Dimensions table

L	Internal part								External part		
	A	B	C	D	E	F	G	X	O	P	Q
356	29.5	92.1	184.2	276.2	-	-	-	349.3	304.6	317.3	330.0
406	29.5	92.1	184.2	276.2	-	-	-	349.3	355.4	368.1	380.8
457	29.5	92.1	184.2	276.2	-	-	-	349.3	406.4	419.1	431.8
508	89.9	92.1	184.2	276.2	368.3	-	-	501.7	457.4	470.1	482.8
559	89.9	92.1	184.2	276.2	368.3	-	-	501.7	508.1	520.8	533.5
610	89.9	92.1	184.2	276.2	368.3	-	-	501.7	558.6	571.3	584.0
660	7.4	92.1	184.2	276.2	368.3	460.4	552.4	603.3	609.4	622.1	634.8
711	7.4	92.1	184.2	276.2	368.3	460.4	552.4	603.3	660.2	672.9	685.6

NOTE

- To mount on 19" plane please order assembly kit separately
- Universal telescopic rails can also be fitted without additional components in non-standard applications, thus also in other than 19" cabinets

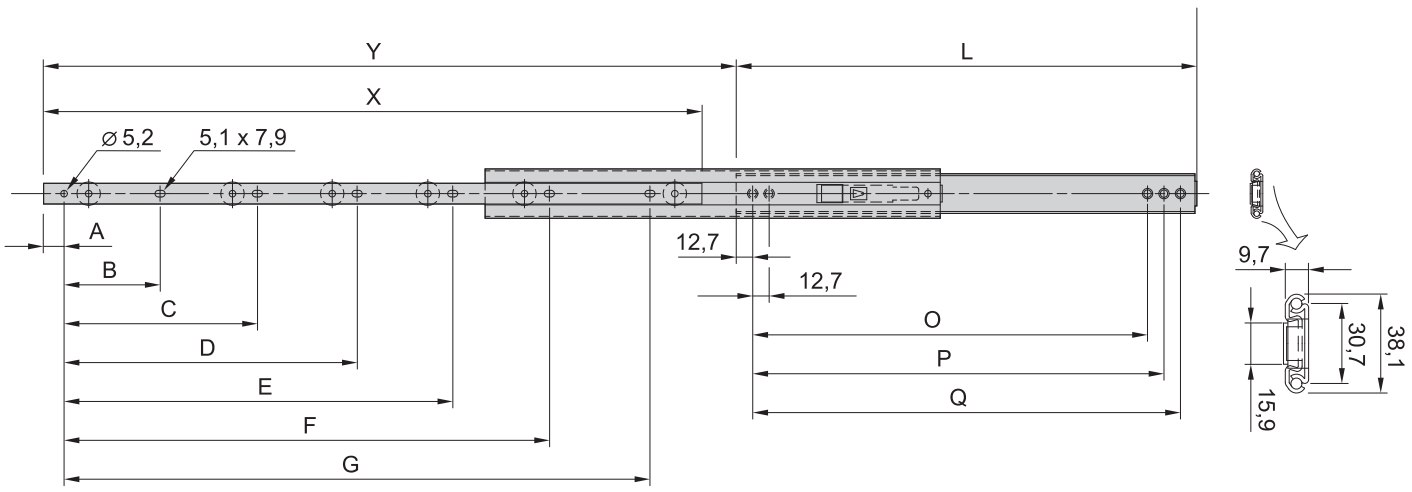

00505055

UNIVERSAL TELESCOPIC SLIDE, 2 U



- Static load-carrying capacity per pair 46 - 61 kg
- Lateral mounting on the 19" uprights (19" plane remains free for fixing the extension/drawer)
- Locking at full extension
- Extension length > 100 %
- Rail width k = 16 mm,
  max. installation width of extension/drawer w = 417 mm

DELIVERY COMPRISES

Item	Qty	Description
1	2	Telescopic slide, St, zinc-plated

ORDER INFORMATION

Length L	Extension length Y	Load-carrying capacity P	Part no.
mm	mm	kg	
305	330	61	**20110-100**
356	381	60	**20110-101**
406	432	58	**20110-102**
457	483	57	**20110-103**
508	533	55	**20110-104**
559	584	52	**20110-105**
610	635	50	**20110-106**
660	686	48	**20110-107**
711	737	46	**20110-108**
Accessories			
Assembly kit For VARISTAR, for assembly of 2 telescopic slides, PU 1 kit			**21120-158**
Assembly kit For eurorack, for assembly of 2 telescopic slides, PU 1 kit			**21120-159**
Assembly kit for NOVASTAR, to mount 2 telescopic slides, PU 1 kit			**21120-160**
Delivery: supplied loose with cabinet or frame			**Part no./35**

00505010

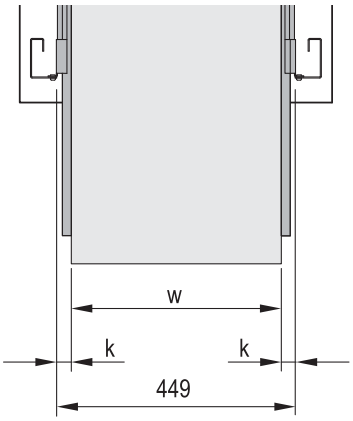

00505060005050 54

k = rail width, w = max. installation width

Dimensions table

Length L	Internal part				External part			
	A	B	C	X	D	E	F	G
305	76.2	177.8	254.0	305.0	76.2	190.5	241.3	266.7
356	101.6	203.2	304.8	356.0	88.9	215.9	292.1	317.5
406	127.0	228.6	355.6	406.0	127.0	241.3	342.9	368.3
457	127.0	279.4	406.4	457.0	127.0	292.1	393.7	419.1
508	152.4	304.8	457.2	508.0	152.4	317.5	444.5	469.9
559	177.8	330.2	508.0	559.0	177.8	342.9	495.3	520.7
610	177.8	381.0	558.8	610.0	177.8	393.7	546.1	571.5
660	203.2	406.4	609.6	660.0	203.2	419.1	596.9	622.3
711	228.6	431.8	660.4	711.0	228.6	444.5	647.7	673.1

NOTE

- To mount on 19" plane please order assembly kit separately
- Universal telescopic rails can also be fitted without additional components in non-standard applications, thus also in other than 19" cabinets

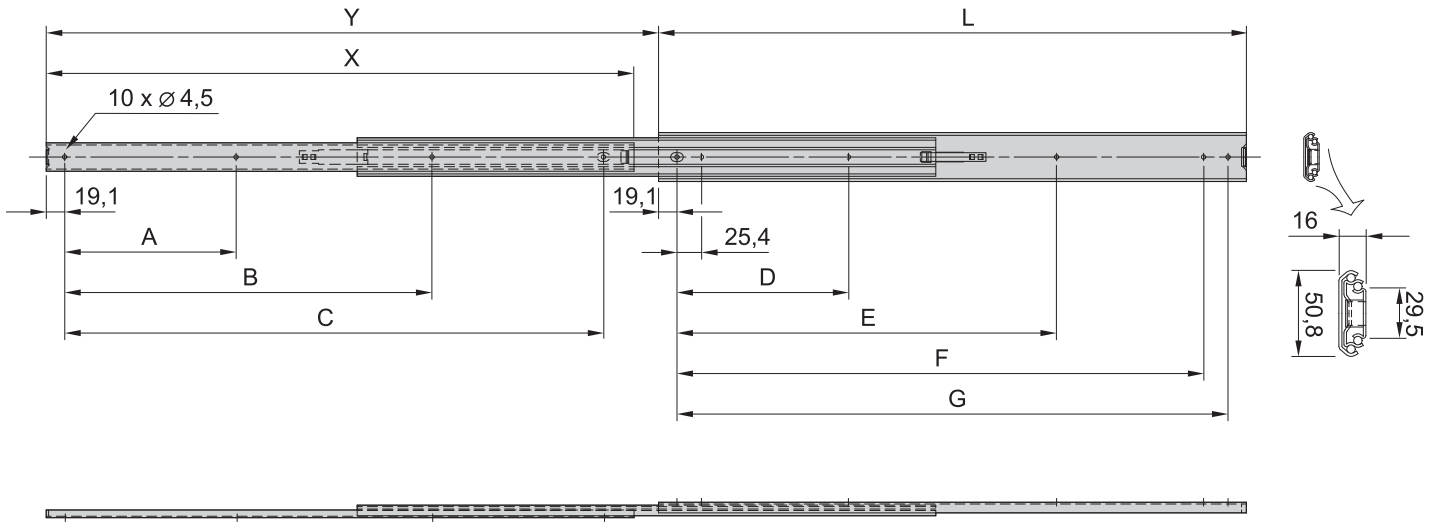

Part number in bold face type: ready for shipping within 2 working days
Part number in normal type: ready for shipping within 10 working days

SLIM UNIVERSAL TELESCOPIC SLIDE, 2 U



00505009

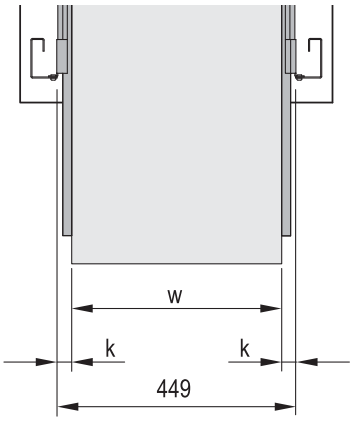

00505060005050 59

k = rail width, w = max. installation width

- Static load-carrying capacity per pair 46 - 57 kg
- Lateral mounting on the 19" uprights (19" plane remains free for fixing the extension/drawer)
- Locking at full extension
- Extension length > 110 %
- Rail width k = 9.7 mm,
  max. installation width of extension/drawer w = 429 mm

DELIVERY COMPRISES

Item	Qty	Description
1	2	Telescopic slide, St, zinc-plated

ORDER INFORMATION

Length L mm	Extension length Y mm	Load-carrying capacity P kg	Part no.
356	432	57	**20110-071**
406	483	55	**20110-072**
457	533	55	**20110-073**
508	584	55	**20110-074**
559	635	46	**20110-075**
584	660	46	**20110-076**
610	686	46	**20110-077**
Accessories			
Assembly kit for VARISTAR, for assembly of 2 telescopic slides, PU 1 kit			**21120-161**
Assembly kit for eurorack, for assembly of 2 telescopic slides, PU 1 kit			**21120-162**
Telescopic slides mounting kit for NOVASTAR, to mount 2 telescopic slides, PU 1 kit			**21120-163**
Delivery: supplied loose with cabinet or frame			**Part no./35**

Dimensions table

Length L	Internal part				External part		
	A	w	C	X	D	E	F
356	101.6	184.2	304.8	356.0	101.6	228.6	330.2
406	127.0	209.6	355.6	406.0	127.0	254.0	381.0
457	127.0	235.0	406.4	457.0	152.4	279.4	431.8
508	152.4	260.4	457.2	508.0	152.4	330.2	482.6
559	203.2	412.8	508.0	559.0	177.8	355.6	533.4
584	203.2	431.8	533.4	584.0	177.8	381.0	558.8
610	203.2	438.2	558.8	610.0	203.2	381.0	584.2

NOTE

- To mount on 19" plane please order assembly kit separately
- Universal telescopic rails can also be fitted without additional components in non-standard applications, thus also in other than 19" cabinets

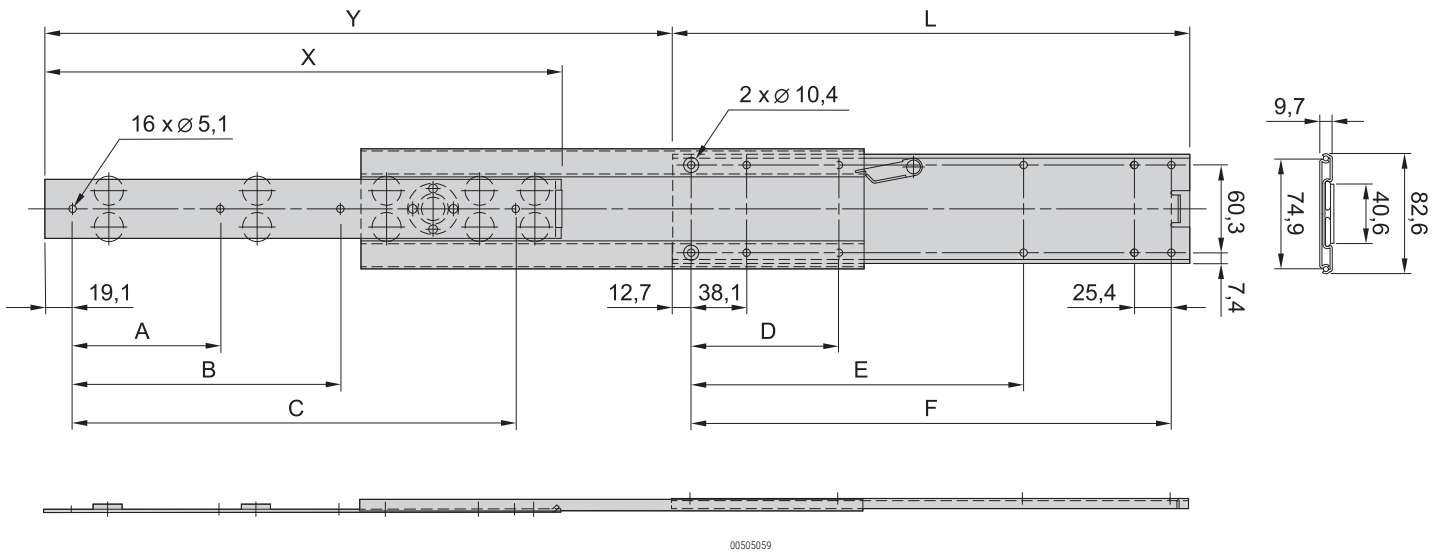

00505059

HEAVY LOAD UNIVERSAL TELESCOPIC SLIDE, 2 U



- Static load-carrying capacity per pair 72 - 100 kg
- Lateral mounting on the 19" uprights (19" plane remains free for fixing the extension/drawer)
- End stop damped
- Extension length > 100 %
- Rail width k = 19.1 mm,
  max. installation width of extension/drawer w = 411 mm

DELIVERY COMPRISES

Item	Qty	Description
1	2	Telescopic slide, St, zinc-plated

ORDER INFORMATION

Length L	Extension length Y	Load-carrying capacity P	Part no.
mm	mm	kg	
300	473	77	**20110-190**
350	573	83	**20110-191**
400	423	88	**20110-192**
450	473	94	**20110-193**
500	523	100	**20110-194**
550	573	94	**20110-195**
600	623	88	**20110-196**
700	723	72	**20110-198**
Accessories			
Assembly kit for VARISTAR, for assembly of 2 telescopic slides, PU 1 kit			**21120-164**
Assembly kit for eurorack, for assembly of 2 telescopic slides, PU 1 kit			**21120-165**
Assembly kit for NOVASTAR, to mount 2 telescopic slides, PU 1 kit			**21120-166**
Delivery: supplied loose with cabinet or frame			**Part no./35**

00508011

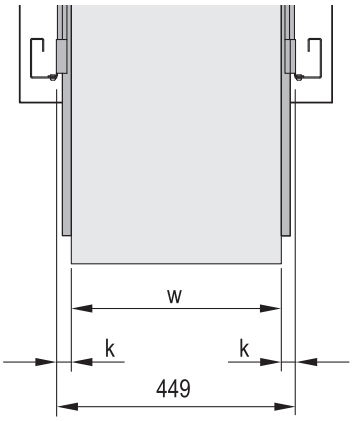

00505060005070 53

k = rail width, w = max. installation width

Dimensions table

Length L	Y	Inner part (mm)			External part (mm)			
mm	mm	A	B	X	C	E	F	G
300	473.5	-	-	300	192	224	-	-
350	573.5	-	-	350	224	256	-	-
400	423,5	128	160	400	288	320	160	192
450	473.5	128	160	450	320	352	160	192
500	523,5	160	192	500	384	416	192	224
550	573.5	160	192	550	416	448	192	224
600	623,5	192	256	600	480	512	256	288
650	673.5	192	256	650	544	576	256	288
700	723,5	256	288	700	576	608	288	320

NOTE

- To mount on 19" plane please order assembly kit separately
- Universal telescopic rails can also be fitted without additional components in non-standard applications, thus also in other than 19" cabinets

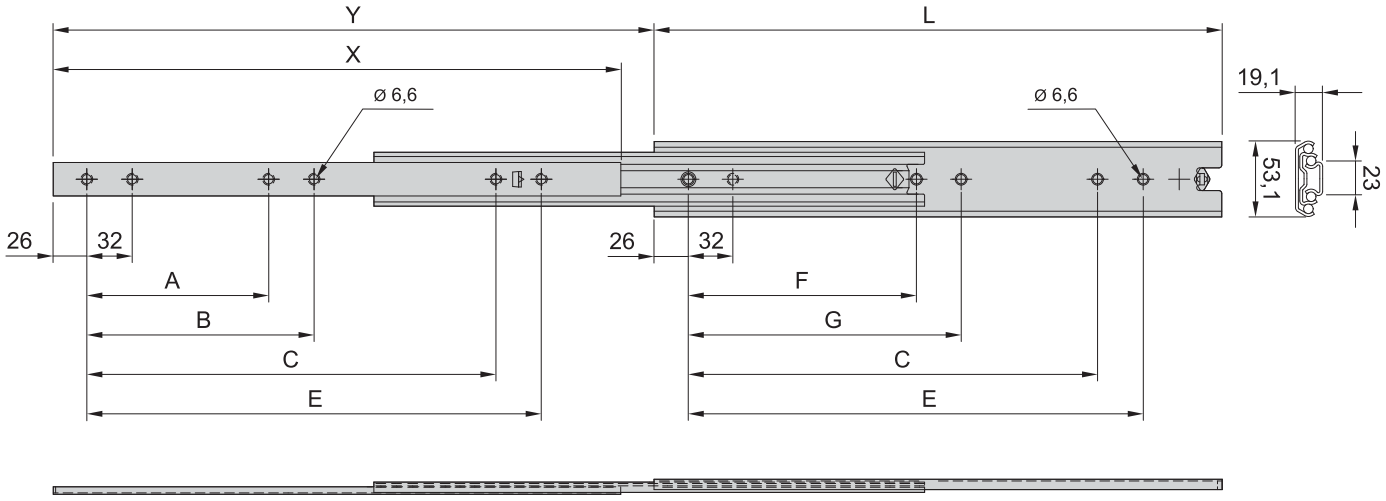

Part number in bold face type: ready for shipping within 2 working days
Part number in normal type: ready for shipping within 10 working days

LED LIGHT FOR CABINET MOUNTING



00518001



00518002

Please order connecting cable separately



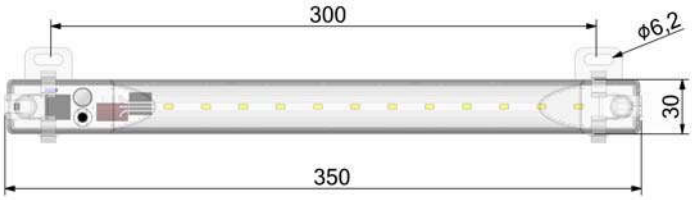

00518051

- Wide-range voltage input 24 ... 265 $V_{AC / DC}$
- Motion sensor and multifunction button
- Easy installation, magnetic and screw fastening
- Luminosity 700 lumens
- Light diffuser -> better lighting of the floor, 1200 lux / 0.5 m
- Excellent performance 117 Lumens / Watt
- Daisy Chain (allows up to 10 lamps to be connected in series), pluggable connection and connection cables
- Integrated optics with unbreakable plastic cover
- Adjustable angle -90 ° to + 90 °, light can be rotated in 2 directions
- Long life and low power consumption

DELIVERY INCLUDES

Item	Qty	Description
1	1	LED lamp (plastic housing) with connection for Wieland plug (on both sides); Length 350 mm, width 30 mm, height 40 mm with holder
2	2	Fixing clips (magnetic and to screw on)
3	1	User manaul

ORDER INFORMATION

Description		Part no.
LED-700L		**60118-570**
Accessories		
Input Cable for AC, length 2.0 m / 78.7 inch, 1 piece		**60118-546**
Extension Cable for AC, length 1.0 m / 39,4 inch, 1 piece		**60118-548**
Connection cable with IEC 60320 C18 connector for AC, length 0,5 m / 19,7 inch, 1 piece		**60130-114**
Female connector for AC, 1 piece		**60118-550**
Male connector for AC, 1 piece		**60118-552**
Bracket 19" 1 U, RAL 7021 (black) 1 piece		**20118-812**
Bracket 19" 1 U, RAL 7035 (grey) 1 piece		**20118-813**

TECHNICAL DATA

Input	AC, DC
Input voltage	24 ... 265 $V_{AC/DC}$
Power consumption	6 W
Luminosity	700 Lm, 1200 lx @ 0,5 m, 450 lx @ 1 m
Lamp type	LED, angle of radiation 120°
Light color	Daylight, color temperature: 5000 K
Service life	50.000 h at +20 °C (+68 °F)
Mounting	Magnetic- and screw fastening
Casing	Plastic, Polykarbonate, transparent
Connection	Wieland connector (long side on both sides, 1 x male connector, 1 x female connector)
Weight	0,2 kg (0,375 lbs)
Functions	Button for switching (motion detector, on, off)
Operating temperature	-20 ... +60 °C (-4 ... +140 °F)
Storage temperature	-40 ... +85 °C (-40 ... +185 °F)
Operating/Storage humidty	max. 90 % rH (non-condensing)
Protection type	IP 20
Protection class	II (double insulated)
Approval	CE/UL

DOOR CONTACT SWITCH WITHOUT CONNECTING CABLE



00518003

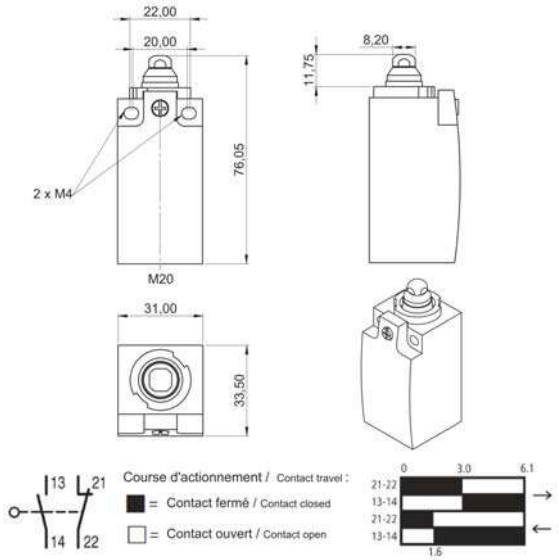

00518008

DELIVERY INCLUDES

Item	Qty	Description
1	1	Door contact switch without connecting cable)
2	1	PG screw fitting M20 x 1.5 for cable diameter 6 ... 12 mm
3	1	Assembly kit

ORDER INFORMATION

Description	Qty/PU piece	Part no.
Door contact switch without connecting cable	1	**20118-810**
Accessories		
Bracket for installation of door switch (Varistar) PU 1 kit		**23130-314**
Bracket for installation of door switch (Novastar) PU 1 kit		**27230-275**
Bracket for installation of door switch (Eurorack) PU 1 kit		**23117-036**
Delivery: fitted in cabinet or on frame		**Part no./05**
Delivery: supplied loose with cabinet or frame		**Part no./35**

TECHNICAL DATA (SWITCH)

Switch contact	2 (1 normally open / 1 normally closed)
Connection	Cage clamp
Mech. life	8 millionen cycles
Voltage	240 V_{AC}
Current	6 A
Protection time	IP 66
Schutzklasse	II
Function	3.1 mm gap to adjust door switch position
Approval	CE, UL, CCC

DOOR CONTACT SWITCH WITH CONNECTING CABLE



00518004

00501501

- Connection to cabinet light via IEC 60320 C13 socket
- Connection with mains supply via SCHUKO/UTE connector
- Easy handling by plug and play (completely wired)

DELIVERY INCLUDES

Item	Qty	Description
1	1	Door contact switch with connecting cable to IEC 60320 C13 socket, plug and mains connection SCHUKO/UTE, fully wired
2	1	Assembly kit

ORDER INFORMATION

Description	Qty/PU piece	Part no.
Door contact switch with connecting cable	1	**20118-811**
Accessories		
Bracket for installation of door switch (Varistar) PU 1 kit		**23130-314**
Bracket for installation of door switch (Novastar), PU 1 kit		**27230-275**
Bracket for installation of door switch (Eurorack) PU 1 kit		**23117-036**
Delivery: fitted in cabinet or on frame		**Part no./05**
Delivery: supplied loose with cabinet or frame		**Part no./35**

NOTE

- Technical data and dimensions of the door contact switch see above

Part number in bold face type: ready for shipping within 2 working days
Part number in normal type: ready for shipping within 10 working days

19" DISTRIBUTION BOX



01495004

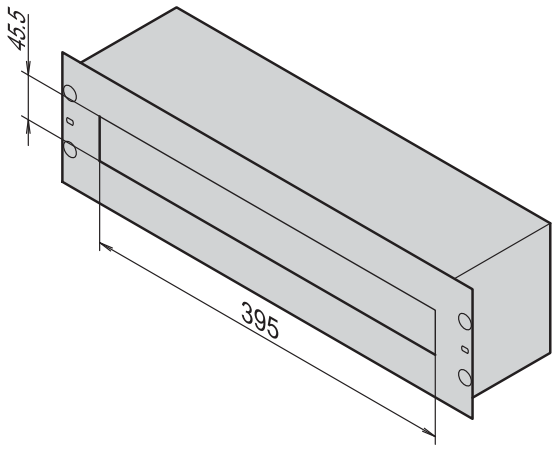

sza45585

Connection clamp



01695012

Clamps



01695034

- For installation of power distribution modules on DIN profile rails (DIN 43880)
- With cable support rail on the rear side, strain relief with clamps
- Two neutral conductors for terminal clamps from 4 ... 35 mm^2

DELIVERY COMPRISES (assembled)

Item	Qty	Description
1	1	Case, 2 parts, 3 U/84 HP, AlZn
2	1	Front panel with cut-out for power distribution module, St, 1 mm, RAL 7035
3	2	Neutral conductors for terminal clamps, Cu, 200 x 3 x 10 mm, zinc-plated, insulated mounting
4	1	DIN profile rail, St, zinc-plated, depth-adjustable with spacing bolts
5	1	Cable support rail for clamps, zinc-plated
6	1	Brush strip, plastic, black, for cable entry
7	2	Sealing strip, fibre glass reinforced Polyester, for unused module positions
8	1	GND/earthing conductor, Cu, 1.5 mm^2, green/yellow, length 360 mm
9	1	Label strip

ORDER INFORMATION

Description	Part No.
19" distribution box	**60118-434**
19" distribution box (with packaging for overseas shipping)	**60118-521**
Accessories	
Terminal clamps for 19" distribution box 4 mm^2, yellow/ green, PU 10 pieces	**21101-529**
Terminal clamps for 19" distribution box 4 mm^2, blue (N),PU 10 pieces	**21101-532**
Terminal clamps for 19" distribution box 16 mm^2, yellow/ green (PE),PU 10 pieces	**21101-530**
Terminal clamps for 19" distribution box 16 mm^2, blue (N),PU 10 pieces	**21101-533**
Terminal clamps for 19" distribution box 35 mm^2, yellow/ green (PE),PU 10 pieces	**21101-531**
Terminal clamps for 19" distribution box 35 mm^2, blue (N),PU 10 pieces	**21101-534**
Clamps for 19" distribution box, PU 14 pieces	**21190-753**
Delivery: supplied loose with cabinet or frame	**Part no./35**

NOTE

- 19" assembly kit, see page 3.17
- Power distribution module, see page 3.33

SMALL DISTRIBUTION MODULE



01695010

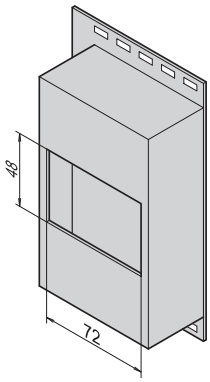

SZA45586

- For the installation of power distribution modules on DIN profile rails (DIN 43880)

DELIVERY COMPRISES

Item	Qty	Description
1	1	Small distribution module, plastic, light grey, with integrated DIN profile rail
2	1	Mounting plate for cabinet mounting, Al, 2.5 mm
3	1	Cover strip, plastic, light grey, for unused module spaces
4	1	Assembly kit for cabinet assembly

ORDER INFORMATION

Description	Part no.
Small distribution module	**20118-538**
Delivery: supplied loose with cabinet or frame	**Part no./35**

NOTE

- Power distribution module, see page 3.33

POWER DISTRIBUTION MODULES IN ACCORDANCE WITH DIN 43880



01695005

Circuit breakers



FI safety switch



016950040169500 3

Socket

- For fitting into 19" distribution box or small distribution module
- Snaps onto DIN profile rail

ORDER INFORMATION

Description	Width mm	Part no.
Circuit breaker 1 x 16 A	17.7	**20119-355**
Circuit breaker 3 x 16 A	53.5	**20119-356**
FI safety switch, 16 A, 30 mA	46	**20119-354**
SCHUKO socket 250 V, 16 A	44	**20119-357**
UTE socket 250 V, 16 A	44	**20119-358**
Delivery: supplied loose with cabinet or frame		**Part no./35**

Part number in bold face type: ready for shipping within 2 working days
Part number in normal type: ready for shipping within 10 working days

DISTRIBUTION BOX



01695009

DELIVERY COMPRISES

Item	Qty	Description
1	1	Distribution box, plastic, light grey
2	1	Terminal strip, 5-pin, for cable cross section 2.5 mm^2
3	1	Mounting plate, Al, 2.5 mm, for cabinet assembly
4	1	Assembly kit for cabinet assembly

ORDER INFORMATION

Description	Part no.
Distribution box	**20118-536**
Delivery: supplied loose with cabinet or frame	**Part no./35**

DISTRIBUTION BOX WITH SCHUKO SOCKET



01604004

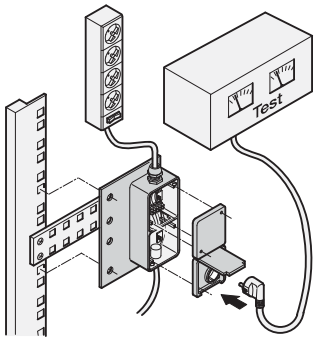

sc107

DELIVERY COMPRISES

Item	Qty	Description
1	1	Distribution box with SCHUKO socket, plastic, light grey, with terminal strip for cable cross section up to 4 mm^2
2	1	Mounting plate 90 x 100 mm, AlZn, 1.5 mm, for assembly on cabinet uprights, 19" profiles and depth members
3	1	Assembly kit for cabinet assembly

ORDER INFORMATION

Description	Part no.
Distribution box with SCHUKO socket	**20118-280**
Delivery: supplied loose with cabinet or frame	**Part no./35**

MOUNTING PLATE FOR SINGLE SOCKETS

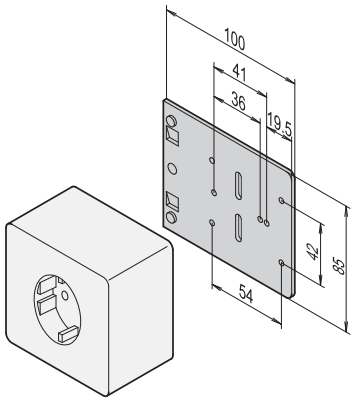

ela44796

- For common surface sockets

DELIVERY COMPRISES

Item	Qty	Description
1	1	Mounting plate, Al, 2.5 mm, for cabinet assembly
2	1	Assembly kit for cabinet assembly

ORDER INFORMATION

Description	Part no.
Mounting plate for single sockets	**20118-537**
Delivery: supplied loose with cabinet or frame	**Part no./35**

NOTE

- Surface socket not included in Schroff product range

GND/EARTHING CLAMP

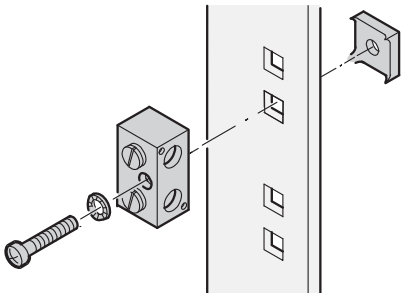

sc27

- IBM-compatible GND/earthing terminal for connecting a cabinet to the building GND/earth
- Maximum cable cross-section 100 mm^2
- Surface tin-plated, in accordance with IBM Ref. No. 4716804

ORDER INFORMATION

Description	Part no.
GND/earthing clamp, incl. assembly kit	**20118-030**
Delivery: supplied loose with cabinet or frame	**Part no./35**

GND/EARTHING RAIL

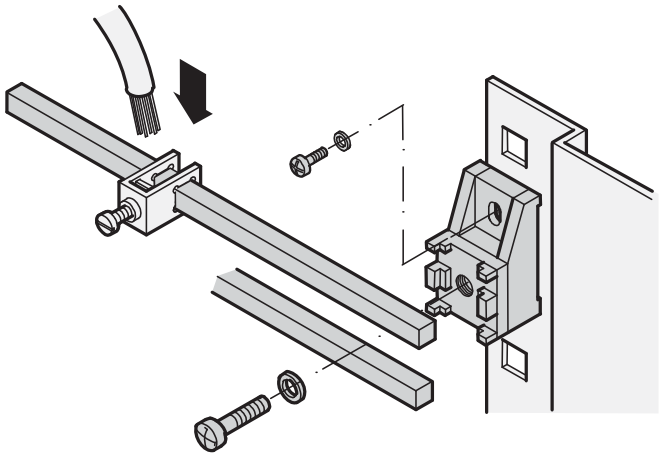

- To connect GND/earthing wire and stranded conductors by means of terminal clamps
- Fixing insulated from the frame

DELIVERY COMPRISES

Item	Qty	Description
1	1	Rail, Cu, cross section 35 mm^2
2	2	Rail support block for max. 2 rails, plastic
3	1	Assembly kit for cabinet assembly

ORDER INFORMATION

Length mm	Part no.
200	**20118-281**
480	**20118-282**
1000	**20118-265**
1910	**20118-266**
Accessories	
Additional second GND/earthing rail, length 200 mm, 1 piece	**60118-145**
Additional second GND/earthing rail, length 480 mm, 1 piece	**60118-144**
Terminal clamps for GND/earthing rail, cable cross section 4 mm^2,PU 20 pieces	**20118-366**
Terminal clamps for GND/earthing rail, cable cross section 16 mm^2,PU 10 pieces	**20118-365**
Terminal clamps for GND/earthing rail, cable cross section 35 mm^2,PU 5 pieces	**20118-364**
Delivery: supplied loose with cabinet or frame	**Part no./35**

NOTE

- Please order terminal clamps or second rail separately

GND/EARTHING RAIL, FLAT STRIP

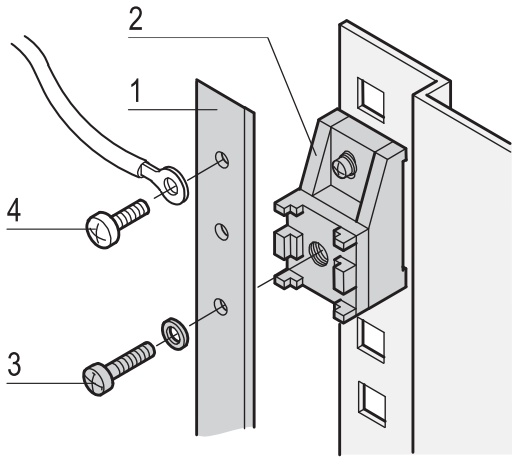

- To screw on GND/earthing cables with ring tags
- Threaded fixing points M5 in intervals of 20 mm
- Fixing insulated from the frame

DELIVERY COMPRISES

Item	Qty	Description
1	1	Rail, brass, untreated, 1000 x 15 x 3 mm, fixing points M5 in intervals of 20 mm
2	2	Rail support block, plastic
3	1	Assembly kit for cabinet assembly

ORDER INFORMATION

Description	Qty/PU	Part no.
GND/earthing rail, flat strip	1	**20118-590**
GND/earthing rail, flat strip	10	**20118-591**
Accessories		
Item 4 Panhead screw M5 x 10, St, zinc-plated, PU 100 pieces		**21120-150**
Delivery: supplied loose with cabinet or frame		**Part no./35**

NOTE

- Please order panhead screw M5 to screw on GND/earth cable separately

MAINS CABLES

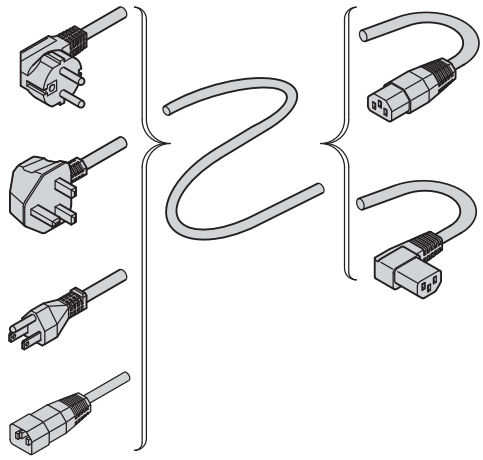

AZA43067

- Applications:
  - Fans, cabinet lights, etc.
  - Industrial PC connections
  - Uninterruptible power supplies
  - Systems

DELIVERY COMPRISES

Item	Qty	Description
1	1	Mains cable, PVC, max. 250 V_{AC}, max. 10 A

ORDER INFORMATION

Plug, mains/line side	Socket IEC 60320 C13, equipment side	Length mm	Colour	For application in	Approvals/ certifications	Part no.
SCHUKO/UTE						
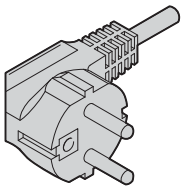 AZA43068	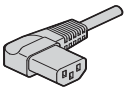 aza43071	2500	black	Germany, France, Austria, Norway, The Netherlands, Sweden, Finland, Spain, Portugal, Turkey, Greece, Belgium, Luxemburg	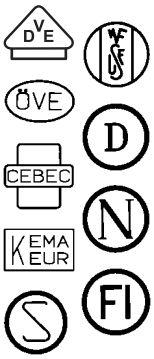	**62150-191**
		2500	grey (to DIN 47732)			**60103-131**
	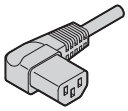 aza43072	2500	grey (to DIN 47732)			**60704-020**
BS						
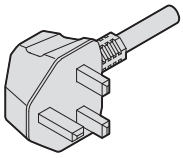 AZA43069	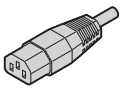 aza43071	2500	black	Great Britain, Ireland		**60103-137**
USA						
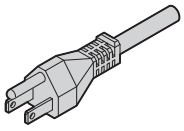 AZA43070	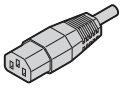 AZA43071	2000	black	USA, Canada		**60103-141**
IEC 60320 C14						
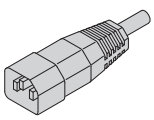 00503051	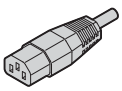 AZA43071	500				**60110-360**
		1000	black	worldwide	IEC 60320	**60110-361**
		2500				**60197-053**
Delivery: supplied loose with cabinet or frame						**Part no./35**

BUSBAR 3 AND 4 POLE

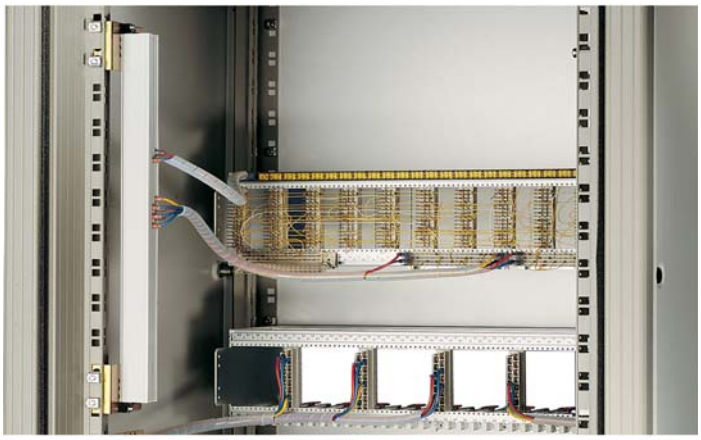

00892013



00892015

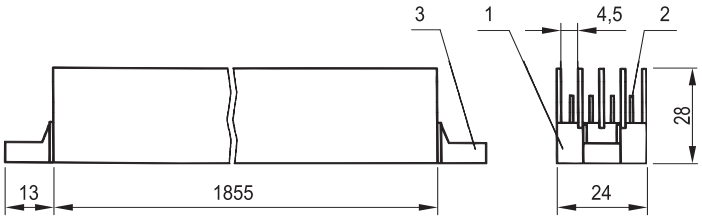

AZA42396

Fixing with insulating block for busbar 3, 4 pole

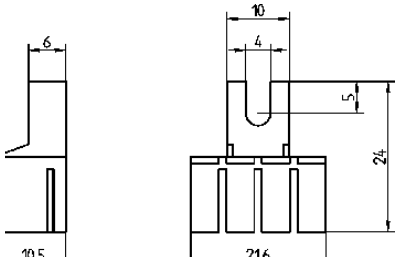

AZA42393

Mounting angle for cabinet assembly

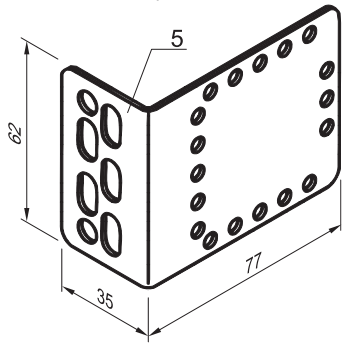

aza40567

- Vertical current distribution in cabinets
- Can be sawn off to required length
- Connections: FASTON connector 6.3 x 0.8 mm

DELIVERY COMPRISES (assembled)

Item	Qty	Description
1	1	Insulating body for 4 inner conductors, length 1855 mm, PVC
2	3 (4)	Inner conductor, pushed in
3	2	Fixing with insulating block, pushed in, PA 6, black,

ORDER INFORMATION

Description	Material	Length mm	Part no.
3 pole	E-Cu tin-plated	1855	**20100-018**
4 pole	E-Cu tin-plated	1855	**20100-017**
4 pole	Brass untreated	1855	**20100-015**
Accessories			
Item 3 Fixing with insulating block PVC, black, PU 10 pieces with assembly kit			**20100-019**
Item 5 Mounting angle for cabinet assembly St, 1.5 mm, finish AlZn, PU 4 pieces			**20100-029**

TECHNICAL DATA

Mains voltage	500 V_{AC} (50 Hz)
Nominal current CuZn conductor	32 A (T_U = 40 °C)
Nominal current Cu conductor	63 A (T_U = 40 °C)
Conductor resistance	6.8 mΩ/m (brass), 1.9 mΩ/m (Cu)
Max. temperature of rail	70 °C
Flammability of insulation body	UL 94-V0

NOTE

- After cutting to length, please order fixings with insulating block separately

Part number in bold face type: ready for shipping within 2 working days
Part number in normal type: ready for shipping within 10 working days

BUSBAR 1 AND 2 POLE

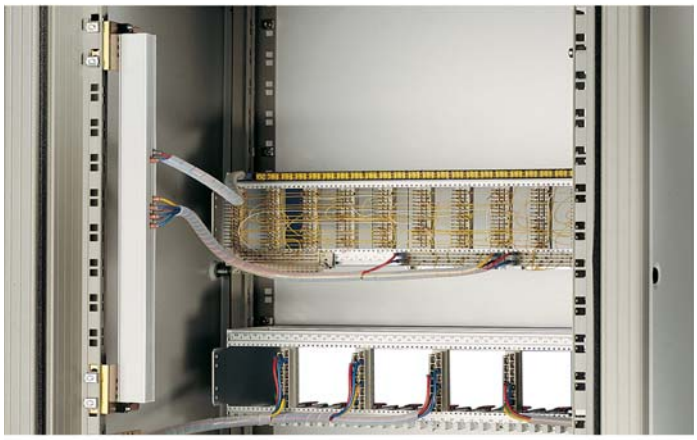

00892013



00892014

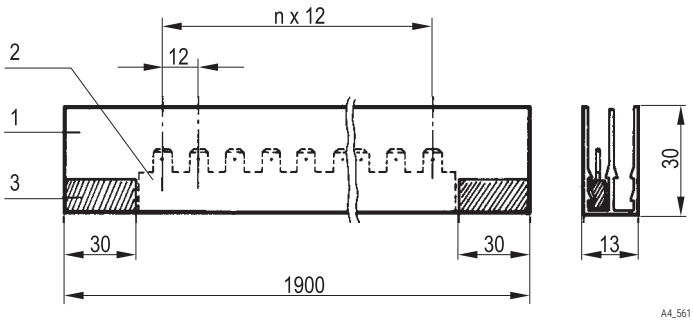

A4_561

- Vertical current distribution in cabinet
- Can be sawn off to required length
- Connections FASTON 6.3 x 0.8 mm

DELIVERY COMPRISES (assembled)

Item	Qty	Description
1	1	Insulating body for 2 inner conductors, length 1900 mm, PVC
2	1 (2)	Inner conductor, pushed in
3	2	Insulating block, glued in, PA 6, grey

ORDER INFORMATION

Description	Material	Length mm	Part no.
1 pole	E-Cu tin-plated	1900	**20100-010**
2 pole	E-Cu tin-plated	1900	**20100-008**
2 pole	Brass untreated	1900	**20100-006**
2 pole	Brass tin-plated	1900	**20100-007**

TECHNICAL DATA

Mains voltage	500 V_{AC} (50 Hz)
Isolation voltage	750 V
Nominal current CuZn conductor	50 A (T_U=20°C), 32 A (T_U=50°C)
Cu conductor	100 A (T_U=20°C), 60 A (T_U=50°C)
Breakdown voltage/test voltage	2500 V/2 kV/1 min
Conductor cross-section	18 mm²
Conductor resistance	4 mΩ/m (brass), 1 mΩ/m (Cu)
Max. temperature of rail	70 °C
Flammability of insulation body	UL 94 V-0

- For mounting please order insulating block or mounting angle separately, see page 3.39

MOUNTING BRACKET FOR BUSBAR 1, 2 POLE

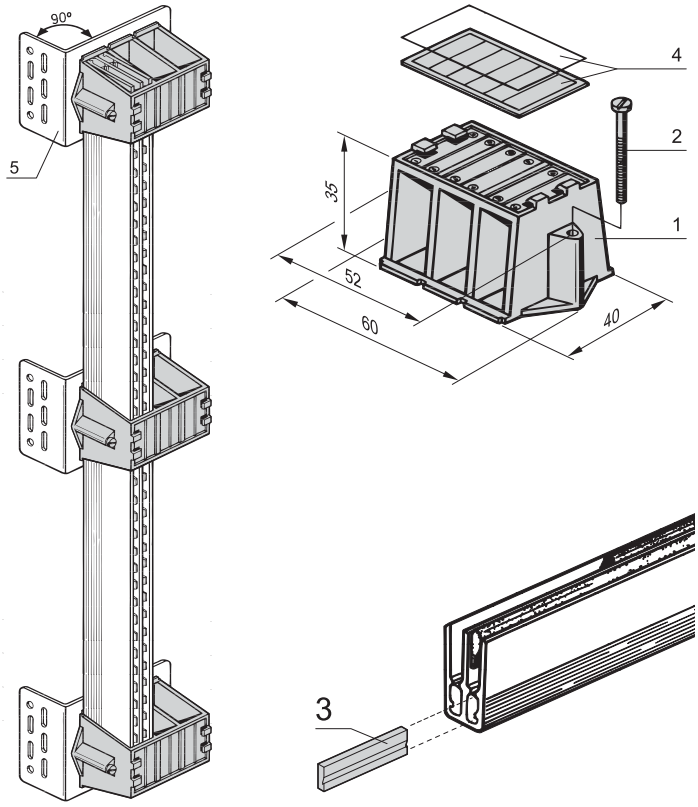

- Mounting of 1 to 3 busbars in full length (max. 6 conductors)
- After cutting to length, glue in new insulating blocks
- Numbers 1...12 are stamped on for conductor identification

DELIVERY COMPRISES

Item	Qty	Description
1	4	Mounting bracket, plastic, Noryl, black
2	8	Screw with cross recess, St, M4 x 30, zinc-plated

ORDER INFORMATION

Description	Part no.
Mounting bracket for bus bar 1, 2-pole	**20100-028**
Accessories	
Item 3 Insulating block for shortened busbar, 1 or 2-pole	**20100-009**
Item 4 Identification label with transparent cover, PU per 10 pieces	**20100-013**
Item 5 Mounting angle for cabinet assembly St, 1.5 mm, finish AlZn, PU 4 pieces	**20100-029**

NOTE

- To ensure stability, mounting brackets should be fitted at 500 mm intervals

MOUNTING WITH INSULATING BLOCK FOR BUSBAR 1, 2 POLE

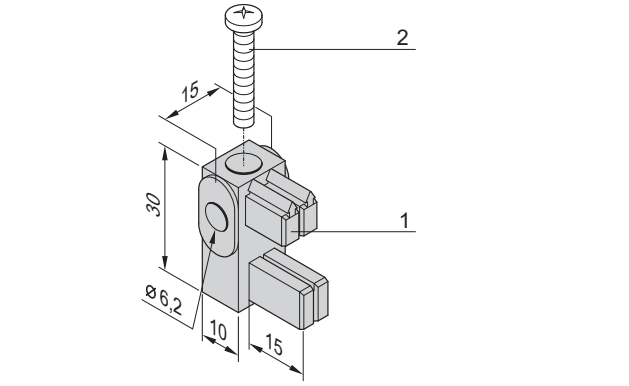

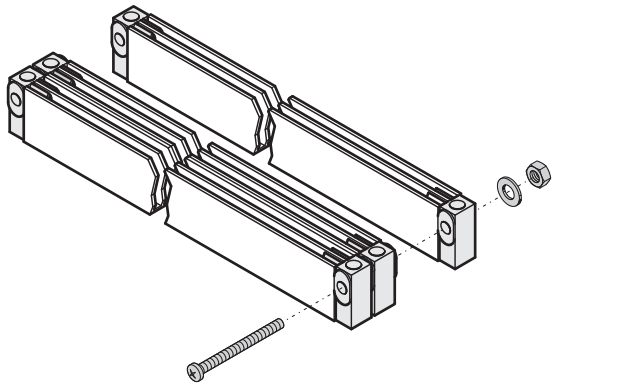

- Easy and space saving assembly of shortened busbars
- With integrated insulating block
- Mounting in rows possible

DELIVERY COMPRISES

Item	Qty	Description
1	4	Fixing with insulating block, Noryl, black
2	4	Screw, M4 x 25, St, zinc-plated

ORDER INFORMATION

Description	Part no.
Fixing with insulating block for busbar 1 or 2 pole	**20100-030**
Mounting angle for cabinet assembly St, 1.5 mm, finish AlZn, PU 4 pieces	**20100-029**

NOTE

- M6 screw, washer and nut for row mounting not included

Part number in bold face type: ready for shipping within 2 working days
Part number in normal type: ready for shipping within 10 working days

CONTACT PROTECTION FOR BUS BAR 1 ... 4 POLE

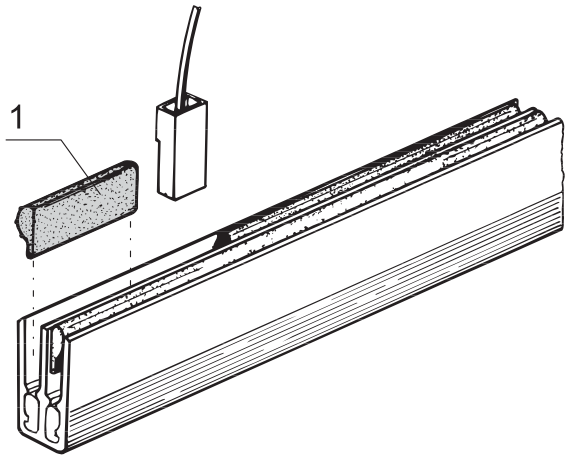

A4-566

- Cover for the inner conductor (between the connectors)
- Can be shortened at any size

DELIVERY COMPRISES

Item	Qty	Description
1	1	Protection against contact for busbar, length 1 m

ORDER INFORMATION

Description	Length m	Part no.
Protection against contact for busbar	1	**60100-398**

INSULATING BLOCK FOR BUSBAR 1 ... 4 POLE

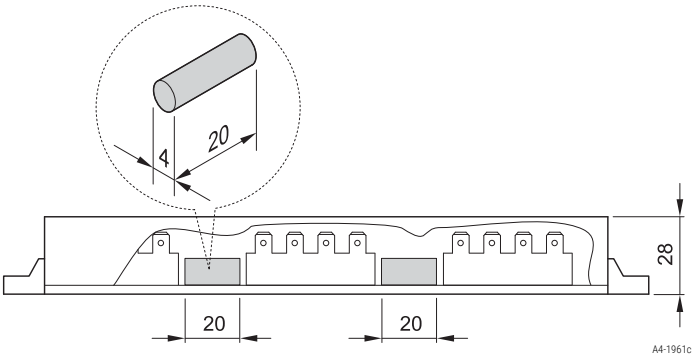

A4-1961c

- The insulating block breaks multiple circuits within one rail

DELIVERY COMPRISES

Item	Qty	Description
1	10	Insulating block, PVC Ø 4 x 20 mm

ORDER INFORMATION

Description	Part no.
Insulating block for busbar 1 ... 4 pole	**20100-021**

POWER CONNECTOR 63 A FOR BUSBAR 1 ... 4 POLE

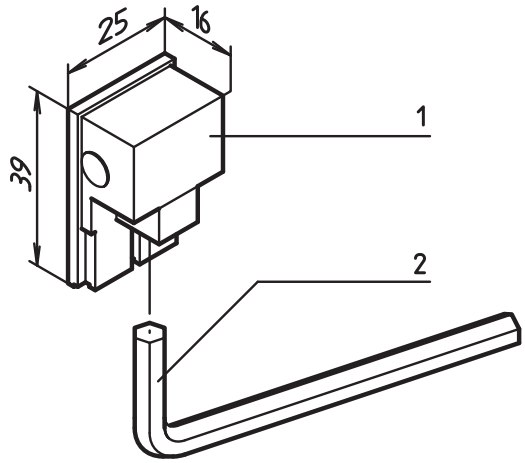

ela44252

- Nominal current max. 63 A at 40 °C
- Cable cross section max. 16 mm²
- Power supply protected against direct contact

DELIVERY COMPRISES

Item	Qty	Description
1	1	Power connector, ABS/E-Cu, tin-plated, ABS, self-extinguishing
2	1	Allen key, St, zinc-plated

ORDER INFORMATION

Description	Part no.
Power connector 63 A for busbar 1 ... 4 pole	**60100-478**

NOTE

- Power connector requires two FASTON slots

POWER CONNECTOR 125 A FOR BUSBAR 1 ... 4 POLE

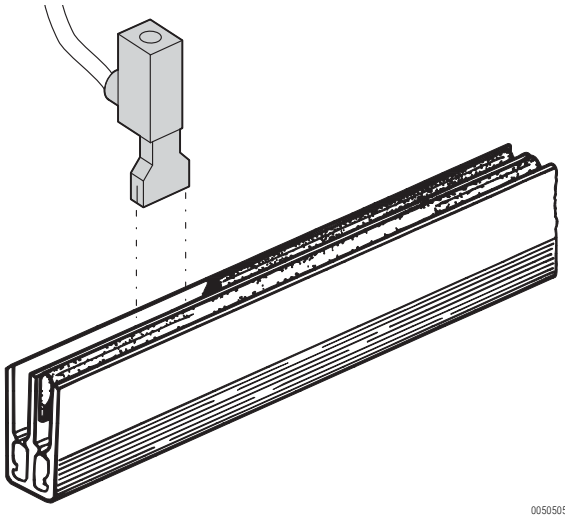

00505052

- Nominal current max. 125 A at 40°C
- Cable cross section max. 25 mm²
- Power supply protected against direct contact

DELIVERY COMPRISES

Item	Qty	Description
1	1	Power connector, PA, halogen-free, copper plate, connected

ORDER INFORMATION

Description	Part no.
Power connector 125 A for busbar 1 ... 4 pole	**60100-575**

NOTE

- Power connector requires three FASTON slots

Cabinet Accessories–Monitor, keyboard

MONITOR, KEYBOARD, TOUCHPAD, 1 U





Front view



Detail of keyboard, touchpad



Rear view

Technical data

Mains voltage	110 ... 240 V_{AC} (50 Hz ... 60 Hz)
Power consumption	Active max 30 W, standby < 1 W
Monitor	17", TFT display, resolution 1280 x 1024 (SXGA), 16.7 million colours, contrast 1000:1, brightness 350 cd/cm², viewing angle 160°, Operating life LED backlight 30000 h, on-screen menu; cConnection by 15-pin H-DSUB socket
Keyboard	83 keys (numeric pad integrated), connects to computer via PS/2 or USB
Touchpad	Industry standard, width 62 mm, height 46 mm, connects to computer via PS/2 or USB
Dimensions (with closed monitor)	Height 1 U (44 mm), width 19" (483 mm), depth without handle 495 mm, depth with handle 535 mm
Dimensions (with open monitor, fully extracted)	Height 380 mm, width 483 mm, depth min. 1000 mm (depending on mounting depth)
Extraction depth	500 mm
Operating / storage temperature	0 ... 50 °C / -20 ... 60 °C
Operating / storage humidity	5 ... 90 % / 5 ... 90 %
Shock	non operating 50 g / 11 ms
Vibration	non operating 1.5 g / 10-300 Hz
Weight	13 kg
MTBF	35000 h

- Pull-out 17" TFT colour monitor chassis, 1 U (resolution 1280 x 1024, SXGA; connects to VGA interface)
- Keyboard with German, English or French keyboard layout (connects via PS2 or USB)
- Integral touchpad (connects via PS2 or USB)
- Voltage supply:
  Wide-range input (nominal mains voltage 110 to 240 V_{AC}),
  Voltage supply 12, 24 and 48 V_{DC} on request
- Depth-adjustable mounting for different pitches of server panel/slide mounts;
  Mounting depth (dimension c = spacing of 19" profiles): 560 ... 800 mm (smaller mounting depths on request)
- Further versions on request
  - With trackball or numeric pad
  - Keyboard layouts for Arabic, Belgian, Danish, US English, Finnish, Italian, Portuguese, Russian, Swedish, Swiss, Spanish and Czech
  - With DVI connection

CE

DELIVERY COMPRISES (assembled and wired)

Item	Qty	Description
1	1	1 U chassis, pull-out, RAL 9005 black; 17" monitor, keyboard and touchpad; Monitor connection via VGA (SUB-D 15), keyboard and touchpad via either PS/2 or USB
2	1	Mains supply cable, length 2 m, SCHUKO/UTE plug ... IEC 60320-C13 socket
3	1	Connecting cable for mouse PS/2 - PS2, length 2 m
4	1	Connecting cable for keyboard PS/2 - PS2, length 2 m
5	2	Connecting cable for keyboard and mouse USB - USB, length 2 m
6	1	Connecting cable for monitor SUB-D 15, length 2 m
7	1	Assembly kit and user manual

ORDER INFORMATION

Description	Qty/PU pieces	Part no.
German keyboard layout	1	60118-518
English keyboard layout	1	60118-519
French keyboard layout	1	60118-520
Accessories		
Equipment cable, BS British Standard plug, IEC 60320 C13 socket, 2.5 m, 1 piece		**60103-137**
Delivery: fitted in cabinet or on frame		**Part no./05**
Delivery: supplied loose with cabinet or frame		**Part no./35**

NOTE

- Adaption to other mains connections see page 3.36

19" DRAWER WITH KEYBOARD (TOUCHPAD), RAL 9005



00518009



00518052

Front view

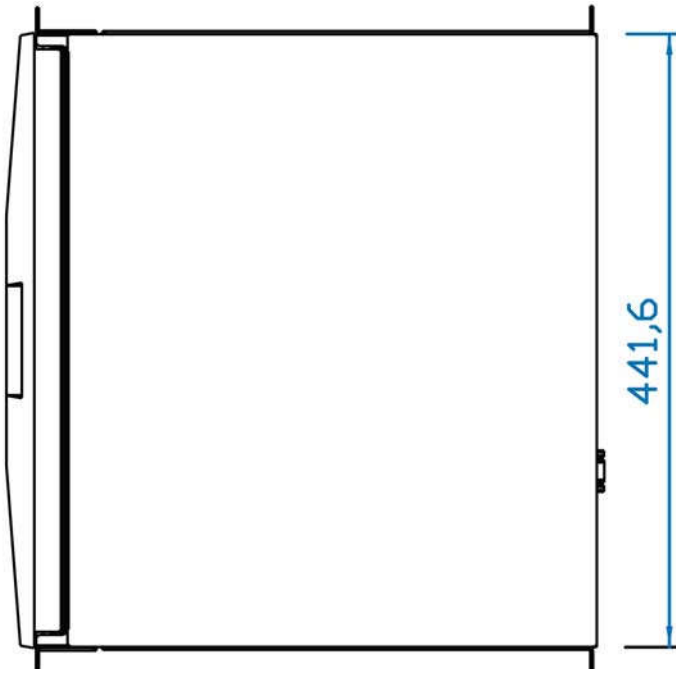

00518053

Top view

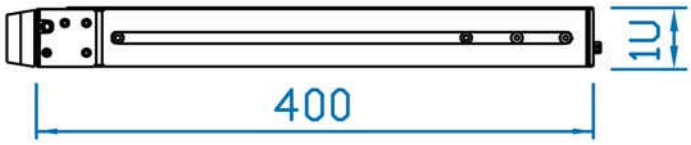

00518054

Side view

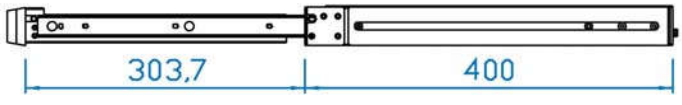

00518055

Pulled out side viewn

- Extendable 1 U drawer with keyboard including function keys, number pad, touchpad
- Locking at full extension and in the inserted state
- Connection to USB
- Color jet black (RAL 9005)
- Installation dimension 19" rail distance (c-dimension) from 470 ... 700 mm

DELIVERY INCLUDES (assembled and wired)

Item	Qty	Description
1	1	19" drawer with front panel 1 U; keyboard (width 441 mm, depth 310 mm); with USB, cable length 1.8 m; touchpad 62 x 46 mm

ORDER INFORMATION

Height U	Width mm	Depth mm	Description	Part no.
1	442	400	German keyboard	**60118-566**
1	442	400	French keyboard layout	**60118-568**
1	442	400	UK keyboard layout	**60118-569**
1	442	400	USA keyboard layout	**60118-567**
Accessories				
Adapter angle for depth adjustment Installation to 19" level (10 mm or 44.5 mm). Due to the adapter angle, the insert can be installed 10 mm or 44.5 mm offset to the front. As a result, the keyboard is fully accessible in the above 19 "internals or installation in the upper cabinet area, PU 2 pieces				**20118-814**

NOTE

- Other keyboard layouts, trackball and connections on request
- 19" assembly kit, see page 3.17

Part number in bold face type: ready for shipping within 2 working days
Part number in normal type: ready for shipping within 10 working days

CABINET MANAGEMENT BASIC UNITS



00711020

EMX 111



00711023

EMX 888



00711021

Rear view EMX 888

- Monitoring and management of air/water heat exchanger, environmental parameters and access
- Local display, Ethernet interface and web interface
- 2 versions
  - EMX 111 Monitoring for one air/water heat exchanger and up to max. 16 sensor values
  - EMX 888 (19" case): Monitoring for up to 8 air/water heat exchangers and up to max. 128 sensor values

DELIVERY COMPRISES

Item	Qty	Description
1	1	Cabinet management basic unit; integrated power supply unit, 230 V_{AC}, IEC C13 socket
2	1	Mains cable IEC C13 on SCHUKO/UTE, cable restrainer with clip
3	2	Mounting bracket
4	1	Serial interface cable with DB9F connection, black
13	1	User manual

ORDER INFORMATION

Height H mm	U	Width W mm		Depth D mm	Part no.
44	–	251	–	53	EMX111
44	1	440	19"	134	EMX888

Interfaces		
EMX111	EMX888	Description
1	8	RJ 12 socket, connection point for environmental sensors
1	8	RJ 45 socket (RS 485; connecting point for air/water heat exchanger)
1	8	RJ 45 socket, connection for asset management strips
1	1	RJ 45 socket, connection point for network (Ethernet)
1	1	USB socket, host
1	1	USB socket, device
-	2	Potential-free contacts
1	1	RS 232 socket, serial interface

NOTE

- Sensors (temperature, humidity, differential pressure, airflow...) and hub for connecting multiple sensors, see from page 3.45

SENSORS

- The sensors are connected to the base unit via a RJ12 interface
- The sensors connected are detected automatically

ORDER INFORMATION

	Description	Measurements	Input Connection	Qty/PU pieces	Part no.
 00709002	Temperature sensor	1 x temperature	Cable length 3 m	1	60110-313
 00709002	Temperature/ humidity combi sensor	1 x temperature 1 x humidity	Cable length 3 m	1	60110-314
 00709003	Two temperature/ humidity combi sensors	2 x temperature 2 x humidity	Cable length 3 m + 3 m	1	60110-315
 00711022	Two temperature sensors and one temperature/ humidity combi sensor	3 x temperature 1 x humidity	Cable length 3 m + 3 m + 3 m	1	DPX-T3H1
 00711018	Dual potential-free contact sensor	–	Cable length 0.5 m	1	DPX-CC2-TR
 00711019	Differential pressure and temperature sensor	1 x pressure 1 x temperature	Cable length 3 m	1	DPX-T1DP1
 00712002	Airflow sensor	1 x air circulation	Cable length 3 m	1	DPX-AF1

NOTE

- Other sensors e.g. smoke detector, vibrations, leakage, etc. on request

Part number in bold face type: ready for despatch within 2 working days
Part number in normal type: ready for despatch within 10 working days

HUB TO ACCEPT 4 SENSORS



00709011

- Connections (signals and power) are via RJ12 plug on the power control socket strip or on the cabinet management system
- A maximum of 4 sensors can be connected, thus up to 16 variables (depending on sensors) can be transmitted (temperature sensor, temperature/humidity combi sensor, differential pressure, potential-free contacts, airflow sensor)

DELIVERY COMPRISES

Item	Qty	Description
1	1	Case, height 18 mm, width 106 mm, depth 37 mm
2	1	RJ12 socket to connect to socket strip or cabinet management system (IN; for power supply and data transmission)
3	4	RJ12 socket for connecting sensors (OUT)
4	1	Connecting cable, RJ12 plug – RJ12 plug, length 1 m
5	2	Mounting angle, St, 2 mm, RAL 7035

ORDER INFORMATION

Description	Part no.
Hub to accept 4 sensors (max. 16 parameters)	60110-316

Cabinet Accessories – Socket strips

OVERVIEW

MAIN KATALOG

Cabinets 1

Wall mounted cases 2

Accessories for cabinets and wall mounted cases . . 3

Climate control . . 4

Electronics cases 5

Subracks/ 19" chassis 6

Front panels, plug-in units 7

Systems 8

Power supply units 9

Backplanes 10

Connectors, front panel component system 11

Appendix 12



00704002



00704003

Single-phase and three-phase strips



00704004

Strips with fixed connecting cables or with Wieland® GST 18 connecting system



00704005

Broad range of functional elements up to master-slave



00708047

19" power distribution for 3 phases, 2 performance classes

Cabinet Accessories – Socket strips

OVERVIEW

SOCKET STRIPS

- **Modular, compact construction with many function elements**
- **Mains input via cable and country-specific plug or via Wieland® GST18 system**
- **Horizontal mounting on the 19" plane (1 U) or vertically on the cabinet frame**
- **Multiphase supply via three-phase strips or IEC power distributor**



SOCKET STRIPS IN 1 U AL EXTRUSION

- Hard wired connecting cable with country-specific mains plug or Wieland® GST18
- Country-specific sockets: IEC, SCHUKO, UTE, British Standard, USA or Swiss versions
- Functional elements: Fault current, overcurrent and transient protection, interference suppression filter with display
- Single-phase and three-phase feed



00704005 00708032



00708033

19" POWER DISTRIBUTOR, 3-PHASE

- 3-phase distributor to connect single phase consumers or socket strips
- Input 3-phase 400 V_{AC} (32 A or 63 A)
- Output with IEC 60320-C19 sockets
  - 6 × 230 VAC in 32 A/phase version
  - 9 × 230 VAC in 63 A/phase version
- Overcurrent protection for each output

SERVICEPLUS

e.g. individual configuration of design, sockets, power connection, functional elements (filter, overcurrent and overvoltage protection, etc.)

Overview **3.50**

Socket strips with connecting cable

SCHUKO

SCHUKO socket strips **3.52**

SCHUKO socket strips, master-slave **3.53**

SCHUKO socket strips, 3 circuits **3.54**

UTE

UTE socket strips **3.55**

UTE socket strips, master-slave **3.56**

UTE socket strips, 3 circuits **3.57**

IEC

IEC socket strips, C13 ..... **3.58**

IEC socket strips, C19 ..... **3.59**

IEC socket strips, C19, 3 phase **3.60**

SCHUKO/ IEC

Socket strips with with 2 supply cables **3.61**

BS

BS socket strips **3.62**

US

USA socket strips **3.63**

Switzerland

Socket strips Swiss version **3.64**

Socket strips, Wieland ®

SCHUKO socket strips, Wieland ® **3.67**

UTE socket strips, Wieland ® **3.68**

IEC socket strips, Wieland® **3.69**

Connector cable for Wieland® **3.70**

19" power distributor

3-phase **3.71**

ServicePLUS ... 3.71

Power Control socket strips ... 3.72

Cabinet Accessories – Socket strips

SCHUKO SOCKET STRIP



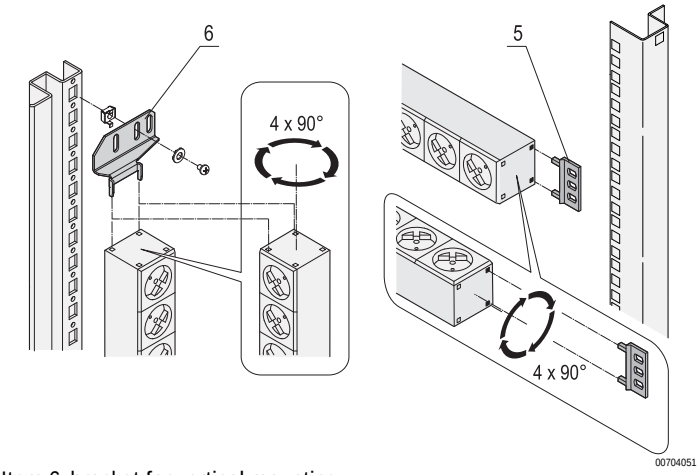

Item 6: bracket for vertical mounting

- Socket strips with SCHUKO sockets, with either switch or function elements
- Installation height 1 U
- Connecting cable 2 m with SCHUKO/UTE plug
- Socket strips can be rotated through all four directions (in 90° increments) during installation
- Horizontal or vertical mounting
- 230 V, 16 A
- In accordance with DIN 57620, VDE 0620

DELIVERY COMPRISES (assembled)

Item	Qty	Description
1	1	Al extrusion, 1 U, anodised, for sockets and functional elements
2		SCHUKO sockets (35° rotated, PA, RAL 7035), illuminated switch and functional elements, for type and quantity see Order information
3	2	End piece, PA, RAL 7035
4	1	Connecting cable, black, 2 m, 05VV-F 3G 1.5 mm^2, with SCHUKO/UTE connector, PVC, encapsulated
5	2	Mounting bracket, PA, RAL 7035 (only with 10", 19" version)

ORDER INFORMATION

Description	Sockets	Length Inch	Length mm	Depth mm	Switch	Functional element	Part no.
SCHUKO	3	–	184	44	–	–	**60110-200**
	4	10"	210	44	–	–	**60110-201**
	9	19"	438.5	44	–	–	**60110-202**
	12	–	947.5	44	–	–	**60110-203**
	15	–	1202	44	–	–	**60110-204**
	19	–	1753	44	–	–	**60110-205**
SCHUKO - with switch	8	19"	438.5	44	X	–	**60110-206**
	12	–	947.5	44	X	–	**60110-207**
	15	–	1202	44	X	–	**60110-208**
	19	–	1753	44	X	–	**60110-209**
SCHUKO with functional elements	6	19"	438.5	88	–	Fault current protection	**60110-216**
	6	19"	438.5	75	–	Overcurrent protection	**60110-212**
	6	19"	438.5	88	–	Fault current protection, overcurrent protection	**60110-217**
	7	19"	438.5	44	–	Mains suppression filter	**60110-214**
	8	19"	438.5	44	–	Transient protection	**60110-210**
	6	19"	438.5	44	–	Transient protection, mains suppression filter	**60110-266**
	9	–	947.5	44	–	Transient protection	**60110-211**
Delivery: fitted in cabinet or on frame							**Part no./05**
Delivery: supplied loose with cabinet or frame							**Part no./35**
Accessories							
Item 6 Mounting bracket for one socket strip for vertical mounting, St, 2 mm, PU 2 pieces							**20110-068**
Mounting plate for mounting of two socket strips side by side for vertical mounting, St, 2 mm, height 70 mm, depth 135 mm, PU 2 pieces							23130-010

NOTE

- Please order mounting bracket for vertical mounting separately

Cabinet Accessories – Socket strips

SCHUKO SOCKET STRIP, MASTER-SLAVE



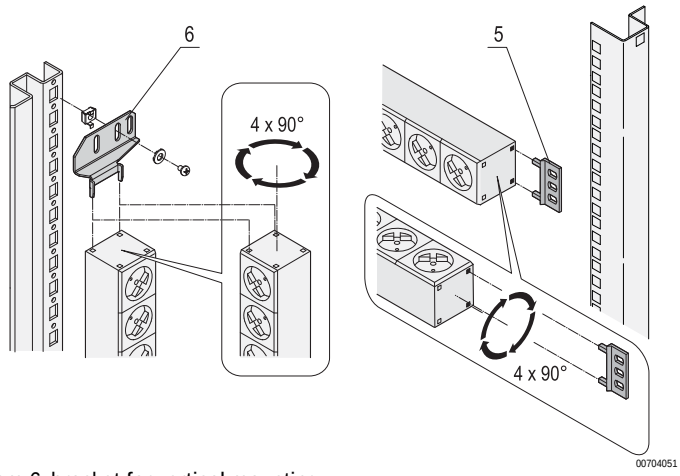

Item 6: bracket for vertical mounting

- When the master unit is switched on the slave outlets are connected to the mains (switch threshold adjustable)
- Mounting height 1 U
- Connecting cable 2 m with SCHUKO/UTE plug
- Socket strips can be rotated through all four directions (in 90° increments) during installation
- Horizontal or vertical mounting
- 110 ... 230 V, 16 A
- In accordance with DIN 57620

CE

DELIVERY COMPRISES (assembled)

Item	Qty	Description
1	1	Al extrusion, 1 U, anodised, for sockets
2	6	SCHUKO sockets (35° rotated, PA, RAL 7035)
3	2	End piece, PA, RAL 7035
4	1	Connecting cable, black, 2 m, 05VV-F 3G 1.5 mm^2, with SCHUKO/UTE connector, PVC, encapsulated
5	2	Mounting bracket, PA, RAL 7035

ORDER INFORMATION

Sockets	Length Inch	Length mm	Depth mm	Part no.
6	19"	438.5	44	**60110-270**
Delivery: fitted in cabinet or on frame				**Part no./05**
Delivery: supplied loose with cabinet or frame				**Part no./35**
Accessories				
Item 6 Mounting bracket for one socket strip for vertical mounting, St, 2 mm, PU 2 pieces				**20110-068**
Mounting plate for mounting of two socket strips side by side for vertical mounting, St, 2 mm, height 70 mm, depth 135 mm, PU 2 pieces				23130-010

NOTE

- Please order mounting bracket for vertical mounting separately

Cabinet Accessories – Socket strips

SCHUKO SOCKET STRIP, 3-PHASE



00704008

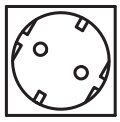

DTA44115

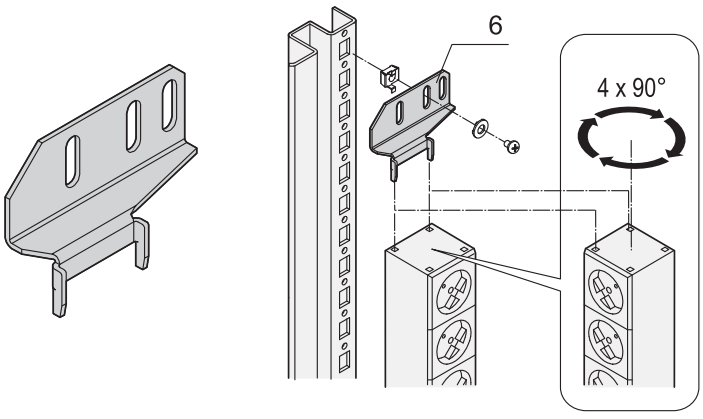

0502502

Item 6: bracket for vertical mounting

- Socket strips with SCHUKO sockets, 3-phase
- Installation height 1 U
- Connecting cable 2 m, open end with ferrules
- Socket strips can be rotated through all four directions (in 90° increments) during installation
- Vertical mounting
- 3 phases, 16 A per phase
- In accordance with DIN 57620

CE

DELIVERY COMPRISES (assembled)

Item	Qty	Description
1	1	Al extrusion, 1 U, anodised, for sockets
2	9	SCHUKO sockets (35° rotated, PA, RAL 7035), 3 phases x 3 sockets, different colours
3	2	End piece, PA, RAL 7035
4	1	Connecting cable, black, 2 m, 05VV-F 5G 2.5 mm^2, open end with ferrules

ORDER INFORMATION

Sockets	Height U	Length mm	Depth mm	Part no.
9	1	608.5	44	**60110-219**
Delivery: fitted in cabinet or on frame				**Part no./05**
Delivery: supplied loose with cabinet or frame				**Part no./35**
Accessories				
Item 6 Mounting bracket for one socket strip for vertical mounting, St, 2 mm, PU 2 pieces				**20110-068**
Mounting plate for mounting of two socket strips side by side for vertical mounting, St, 2 mm, height 70 mm, depth 135 mm, PU 2 pieces				23130-010

NOTE

- Please order mounting bracket for vertical mounting separately

Cabinet Accessories – Socket strips

UTE SOCKET STRIP



00705002 DTA44116

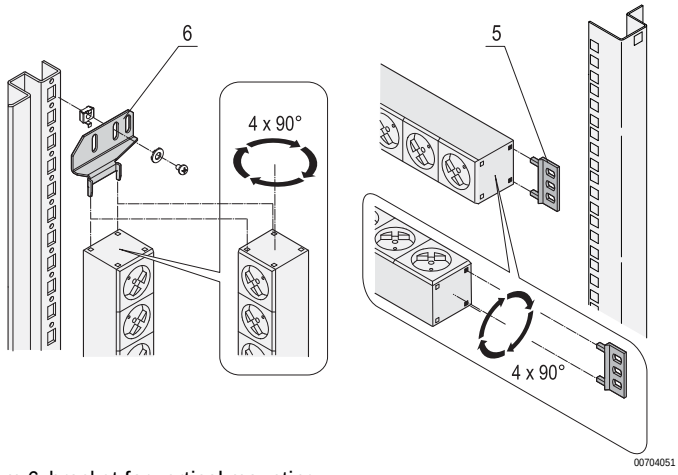

00704051

Item 6: bracket for vertical mounting

- Socket strip with SCHUKO sockets, either with switch or functional elements
- Mounting height 1 U
- Connecting cable 2 m, with SCHUKO/UTE plug
- Socket strips can be rotated through all four directions (in 90° increments) during installation
- Horizontal and vertical mounting
- 230 V, 16 A
- In accordance with NFC 61-303

CE

DELIVERY COMPRISES (assembled)

Item	Qty	Description
1	1	Al extrusion, 1 U, anodised, for sockets and functional elements
2		UTE sockets (35° rotated, PA, RAL 7035), illuminated switch and functional elements, for type and quantity see Order information
3	2	End piece, PA, RAL 7035
4	1	Connecting cable, black, 2 m, 05VV-F 3G 1.5 mm^2, with SCHUKO/UTE connector, PVC, encapsulated
5	2	Mounting bracket, PA, RAL 7035 (only with 10", 19" version)

ORDER INFORMATION

Description	Sockets	Length Inch	Length mm	Depth mm	Switch	Functional element	Part no.
Socket strip 10", 4 UTE sockets	4	10"	210	44	–	–	**60110-220**
	9	19"	438.5	44	–	–	**60110-221**
	12	–	947.5	44	–	–	**60110-222**
	15	–	1202	44	–	–	**60110-223**
	19	–	1753	44	–	–	**60110-224**
UTE with switch	8	19"	438.5	44	X	–	**60110-225**
	12	–	947.5	44	X	–	**60110-226**
UTE with functional element	6	19"	438.5	88	–	Fault current protection	**60110-230**
	6	19"	438.5	75	–	Overcurrent protection	**60110-228**
	6	19"	438.5	88	–	Fault current protection, overcurrent protection	**60110-231**
	7	19"	438.5	44	–	Mains suppression filter	**60110-229**
	8	19"	438.5	44	–	Transient protection	**60110-227**
	6	19"	438.5	44	–	Transient protection, mains suppression filter	**60110-267**
Delivery: fitted in cabinet or on frame							**Part no./05**
Delivery: supplied loose with cabinet or frame							**Part no./35**
Accessories							
Item 6 Mounting bracket for one socket strip for vertical mounting, St, 2 mm, PU 2 pieces							**20110-068**
Mounting plate for mounting of two socket strips side by side for vertical mounting, St, 2 mm, height 70 mm, depth 135 mm, PU 2 pieces							23130-010

NOTE

- Please order mounting bracket for vertical mounting separately

Part number in bold face type: ready for despatch within 2 working days
Part number in normal type: ready for despatch within 10 working days

Cabinet Accessories – Socket strips

UTE SOCKET STRIP, MASTER-SLAVE



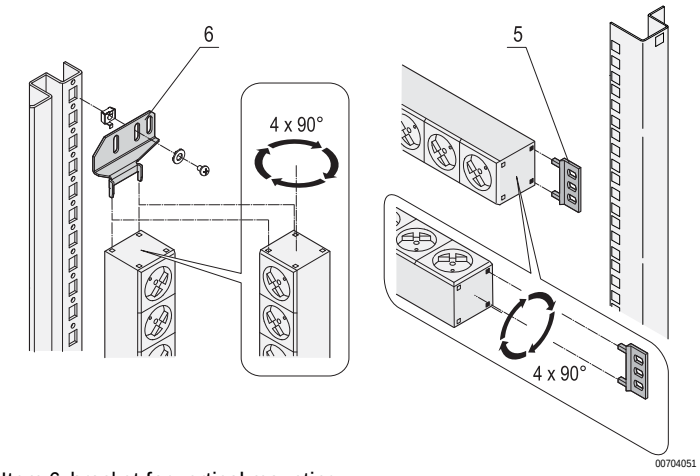

Item 6: bracket for vertical mounting

- When the master unit is switched on, the slave outputs are connected to the mains (switch threshold adjustable)
- Mounting height 1 U
- Connecting cable 2 m, with SCHUKO/UTE plug
- Socket strips can be rotated through all four directions (in 90° increments) during installation
- Horizontal and vertical mounting
- 230 V, 16 A
- In accordance with NFC 61-303

CE

DELIVERY COMPRISES (assembled)

Item	Qty	Description
1	1	Al extrusion, 1 U, anodised, for sockets
2	6	UTE sockets (35° rotated, PA, RAL 7035)
3	2	End piece, PA, RAL 7035
4	1	Connecting cable, black, 2 m, 05VV-F 3G 1.5 mm^2, with SCHUKO/ UTE connector, PVC, encapsulated
5	2	Mounting bracket, PA, RAL 7035

ORDER INFORMATION

Sockets	Length Inch	Length mm	Depth mm	Part no.
6	19"	438.5	44	**60110-232**
Delivery: fitted in cabinet or on frame				**Part no./05**
Delivery: supplied loose with cabinet or frame				**Part no./35**
Accessories				
Item 6 Mounting bracket for one socket strip for vertical mounting, St, 2 mm, PU 2 pieces				**20110-068**
Mounting plate for mounting of two socket strips side by side for vertical mounting, St, 2 mm, height 70 mm, depth 135 mm, PU 2 pieces				23130-010

NOTE

- Please order mounting bracket for vertical mounting separately

Cabinet Accessories – Socket strips

UTE SOCKET STRIP, 3-PHASE



00704010



DTA44116

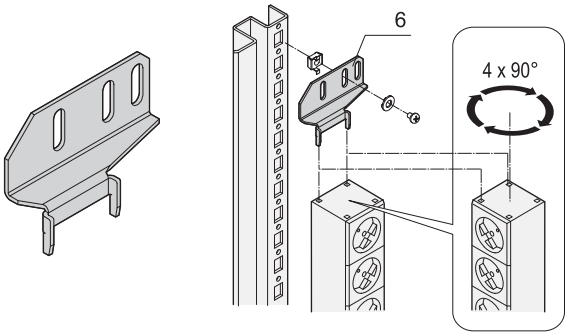

00502502

Item 6: bracket for vertical mounting

- Socket strips with UTE sockets, 3-phase
- Installation height 1 U
- Connecting cable 2 m, open end with ferrules
- Socket strips can be rotated through all four directions (in 90° increments) during installation
- Vertical mounting
- 3 phases, 16 A per phase
- In accordance with NFC 61-303

CE

DELIVERY COMPRISES (assembled)

Item	Qty	Description
1	1	Al extrusion, 1 U, anodised, for sockets
2	9	UTE sockets (35° rotated, PA, RAL 7035), 3 phases x 3 sockets, different colours
3	2	End piece, PA, RAL 7035
4	1	Connecting cable, black, 2 m, 05VV-F 5G 2.5 mm^2, open end with ferrules

ORDER INFORMATION

Sockets	Height U	Length mm	Depth mm	Part no.
9	1	608.5	44	**60110-233**
Delivery: fitted in cabinet or on frame				**Part no./05**
Delivery: supplied loose with cabinet or frame				**Part no./35**
Accessories				
Item 6 Mounting bracket for one socket strip for vertical mounting, St, 2 mm, PU 2 pieces				**20110-068**
Mounting plate for mounting of two socket strips side by side for vertical mounting, St, 2 mm, height 70 mm, depth 135 mm, PU 2 pieces				23130-010

NOTE

- Please order mounting bracket for vertical mounting separately

Part number in bold face type: ready for despatch within 2 working days
Part number in normal type: ready for despatch within 10 working days

Cabinet Accessories – Socket strips

IEC SOCKET STRIP, C13



00710010 dta44118

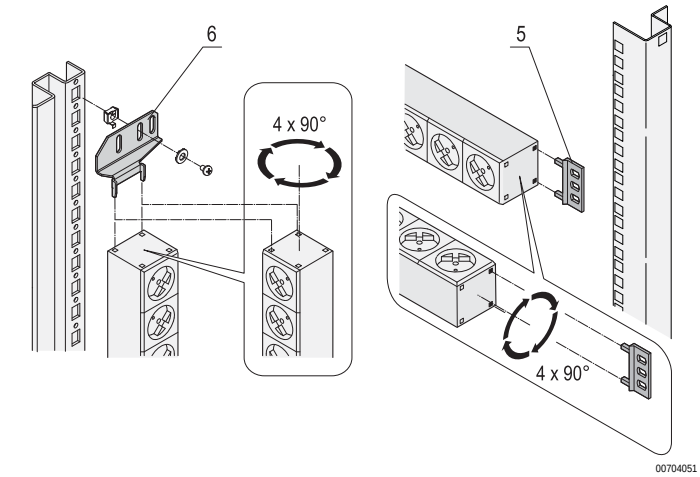

00704051

Item 6: bracket for vertical mounting



00708036

Strain relief provided by locking tabs

- Socket strips with IEC 60320-C13 sockets
- Mounting height 1 U
- Connecting cable 2 m, open end with ferrules
- Socket strips can be rotated through all four directions (in 90° increments) during installation
- Horizontal and vertical mounting
- 230 V, 10 A
- In accordance with IEC 60320

CE

DELIVERY COMPRISES (assembled)

Item	Qty	Description
1	1	Al extrusion, 1 U, anodised, to accommodate the sockets and function elements
2		IEC 60320-C13 sockets (PA, RAL 7035), quantity see Order information
3	2	End piece, PA, RAL 7035
4	1	Connecting cable, 2 m, black, open end with ferrules, H05VV-F 3G 1.5 mm^2
5	2	Mounting bracket, PA, RAL 7035, (on 19" versions only)

ORDER INFORMATION

Sockets	Length Inch	Length mm	Depth mm	Part no.
8	19"	438.5	44	**60110-290**
12	19"	438.5	44	**60110-291**
16	–	608.5	44	**60110-292**
Delivery: fitted in cabinet or on frame				**Part no./05**
Delivery: supplied loose with cabinet or frame				**Part no./35**
Accessories				
Locking tab for IEC 60320-C13 connector PU 12 pieces				**60110-362**
Item 6 **Mounting bracket for socket strips** for vertical mounting, St, 2 mm, PU 2 pieces				**20110-068**
Mounting plate for mounting of two socket strips side by side for vertical mounting, St, 2 mm, height 70 mm, depth 135 mm, PU 2 pieces				23130-010
Mains cable, IEC : for locking tab IEC 60320-C14 plug, IEC 60320 C13 socket, 0.5 m, 1 piece				**60110-360**
Mains cable, IEC : for locking tab IEC 60320-C14 plug, IEC 60320 C13 socket, 1 m, 1 piece				**60110-361**

NOTE

- Please order bracket for vertical mounting separately
- IEC socket strips, telemonitored and remote-controlled see page 3.75
- IEC socket strips with universal connections (Wieland® connectors) see page 3.67

Cabinet Accessories – Socket strips

IEC SOCKET STRIP, C19

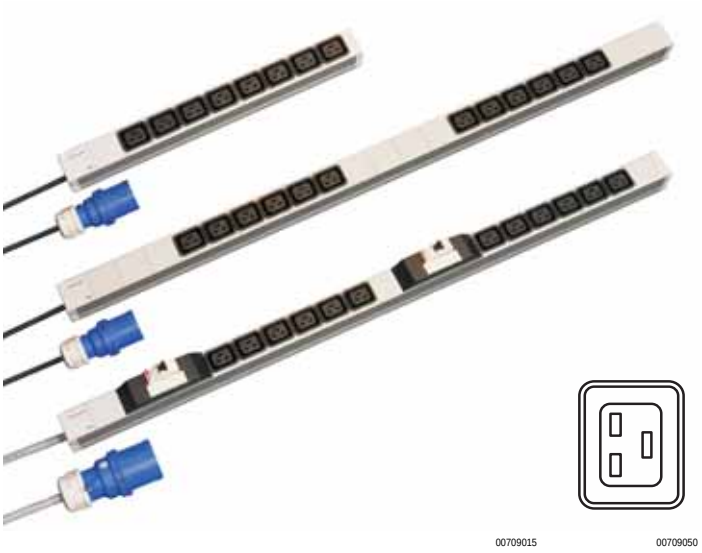

00709015 00709050

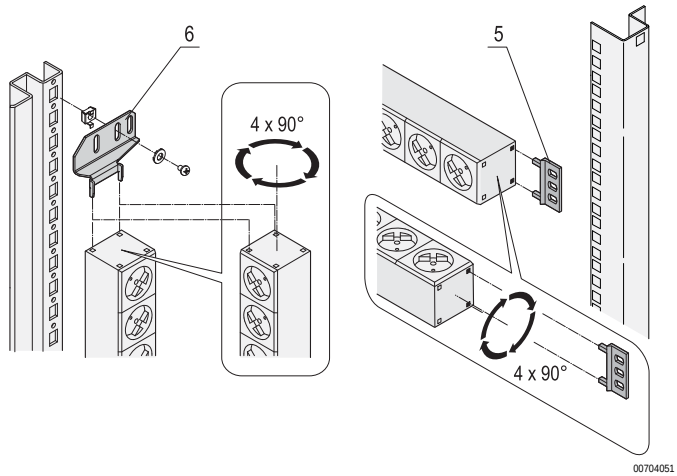

00704051

Item 6: bracket for vertical mounting

- Socket strips with C19 IEC sockets (8 or 12 pieces)
- Mounting height 1 U
- Connecting cable 2 m, with connector in accordance with IEC 60309
- Socket strips can be rotated through all four directions (in 90° increments) during installation
- Vertical mounting (19" version horizontal or vertical)
- 230 V, 32 A (with 2 x 16 A fuse), 16 A (without fuse)

CE

DELIVERY COMPRISES

Item	Qty	Description
1	1	Al extrusion, 1 U, anodised, for sockets and functional elements
2		Sockets, IEC 60320 C19 (PA, RAL 7035), for type and quantity see Order information
3	2	End piece, PA, RAL 7035
4	1	Connecting cable, 2 m, with IEC 60309 connector
5	2	Mounting bracket, PA, RAL 7035, only for 19" versions

ORDER INFORMATION

Sockets IEC 60320 C19	Length Inch	Length mm	Depth mm	Input	Fuse	Part no.
8	19"	438.5	44	230 V_{AC}, 16 A	–	**60110-280**
12	–	947.5	44	230 V_{AC}, 16 A	–	**60110-282**
12	–	947.5	44	230 V_{AC}, 32 A	2 x 16 A	**60110-281**
Delivery: fitted in cabinet or on frame						**Part no./05**
Delivery: supplied loose with cabinet or frame						**Part no./35**
Accessories						
Item 6 Mounting bracket for one socket strip for vertical mounting, St, 2 mm, PU 2 pieces						**20110-068**
Mounting plate for mounting of two socket strips side by side for vertical mounting, St, 2 mm, height 70 mm, depth 135 mm, PU 2 pieces						23130-010

NOTE

- Please order bracket for vertical mounting separately
- 19" assembly kit see page 3.17

Part number in bold face type: ready for despatch within 2 working days
Part number in normal type: ready for despatch within 10 working days

Cabinet Accessories – Socket strips

IEC SOCKET STRIP, 3 PHASE



00709019 DTA44118 00709050

C13 C19

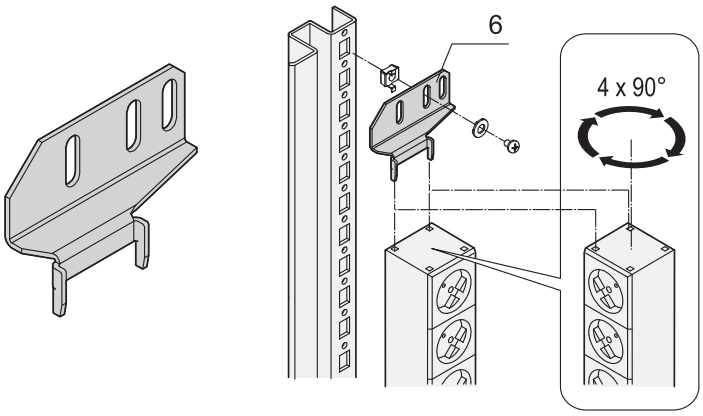

00502502

Item 6: bracket for vertical mounting

- Socket strips with IEC sockets in accordance with IEC 60320 (C13 or C13/C19)
- Mounting height 1 U
- Connecting cable 2 m, 3 phase, with connector plug in accordance with IEC 60309 (16 A or 32 A)
- Socket strips can be rotated through all four directions (in 90° increments) during installation
- Vertical mounting
- 400 V, 32 A (with 6 x 16 A fuse), 16 A (without fuse)

CE

DELIVERY COMPRISES

Item	Qty	Description
1	1	Al extrusion, 1 U, anodised, for sockets and functional elements
2		Sockets IEC 60320 (PA, RAL 7035), type and quantity see Order information
3	2	End piece, PA, RAL 7035
4	1	Connecting cable, 2 m, with IEC 60309 connector

ORDER INFORMATION

Input	Length mm	Depth mm	Output	Fuse	Part no.
400 V_{AC}, 16 A	947.5	44	18 x IEC C13	–	**60110-283**
400 V_{AC}, 16 A	947.5	44	18 x IEC C13, 6 x IEC C19	–	**60110-284**
400 V_{AC}, 32 A	1753	44	24 x IEC C13, 6 x IEC C19	6 x 16 A	**60110-285**
Delivery: fitted in cabinet or on frame					**Part no./05**
Delivery: supplied loose with cabinet or frame					**Part no./35**
Accessories					
Item 6 Mounting bracket for one socket strip for vertical mounting, St, 2 mm, PU 2 pieces					**20110-068**
Mounting plate for mounting of two socket strips side by side for vertical mounting, St, 2 mm, height 70 mm, depth 135 mm, PU 2 pieces					23130-010

NOTE

- Please order bracket for vertical mounting separately
- 19" assembly kit see page 3.17

Cabinet Accessories – Socket strips

SOCKET STRIPS WITH 2 SUPPLY CABLES, SCHUKO AND IEC, 3 PHASE



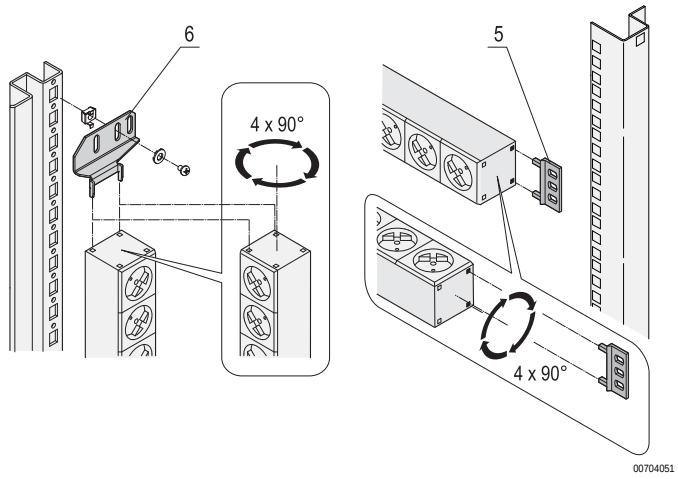

- Socket strips with IEC 60320-C13 sockets and SCHUKO sockets
- Mounting height 1 U
- Two connector cables (halved in direction of length), 3 m (with open end), 2 x 3 phase, 400 V_{AC} (red, black, white area)
- Socket strips can be rotated in all directions (in 90° increments) during installation
- Horizontal and vertical assembly possible

CE

DELIVERY INCLUDES

Item	Qty	Description
1	1	Al extrusion, 1 U, anodized, for socket inserts
2		Socket inserts, IEC 60320 (PA, RAL 7035), type and quantity see Order information
3	2	Endpiece, PA, RAL 7035
4	1	Connector cable, 2 x 2 m, open cable end for laying

ORDER INFORMATION

Input	Length mm	Depth mm	Output	Part no.
400 V_{AC}, 16 A	1848.5	44	36 x IEC C13 + 12 x SCHUKO	**60110-286**
400 V_{AC}, 16 A	1848.5	44	48 x IEC C13	**60110-287**
Delivery: fitted in cabinet or on frame				**Part no./05**
Delivery: supplied loose with cabinet or frame				**Part no./35**
Accessories				
Item 6 Mounting bracket for one socket strip for vertical mounting, St, 2 mm, PU 2 pieces				**20110-068**
Mounting plate for mounting of two socket strips side by side for vertical mounting, St, 2 mm, height 70 mm, depth 135 mm, PU 2 pieces				23130-010

NOTE

- Fixing bracket for vertical mounting, only required for fitting into 47 U cabinet, please order separately

Part number in bold face type: ready for despatch within 2 working days
Part number in normal type: ready for despatch within 10 working days

Cabinet Accessories – Socket strips

BS SOCKET STRIP



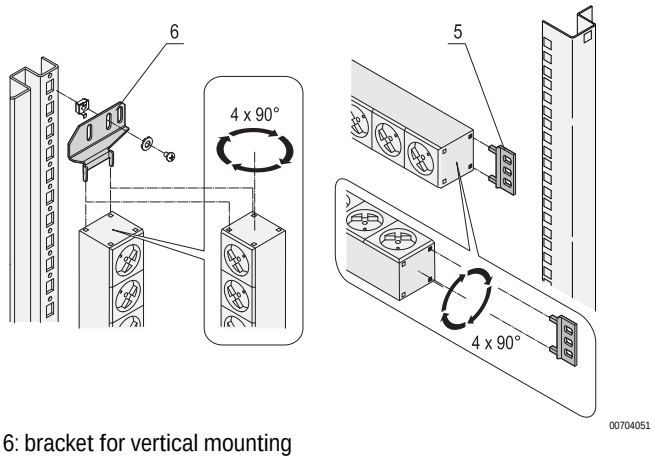

Item 6: bracket for vertical mounting

- Socket strips with British Standard sockets, optionally with switch
- Installation height 1 U
- Supply cable 2 m with BS plug (fuse integrated)
- Socket strips can be rotated through all four directions (in 90° increments) during installation
- Horizontal and vertical mounting
- 230 V, 13 A
- In accordance with BS 1363

CE

DELIVERY COMPRISES (assembled)

Item	Qty	Description
1	1	Al extrusion, 1 U, anodised, for sockets and functional elements
2		BS sockets (PA, RAL 7035) and switch (illuminated), type and quantity see Order information
3	2	End piece, PA, RAL 7035
4	1	Connecting cable, black, 2 m, 05VV-F 3G 1.5 mm^2, with BS connector (integrated 13 A fuse), PVC, encapsulated
5	2	Mounting bracket, PA, RAL 7035, only for 19" versions

ORDER INFORMATION

Description	Sockets	Length Inch	Length mm	Depth mm	Part no.
BS	7	19"	438.5	44	**60110-243**
BS	10	–	947.5	44	**60110-244**
BS with switch	6	19"	438.5	44	**60110-245**
Delivery: fitted in cabinet or on frame					**Part no./05**
Delivery: supplied loose with cabinet or frame					**Part no./35**
Accessories					
Item 6 Mounting bracket for one socket strip for vertical mounting, St, 2 mm, PU 2 pieces					**20110-068**
Mounting plate for mounting of two socket strips side by side for vertical mounting, St, 2 mm, height 70 mm, depth 135 mm, PU 2 pieces					23130-010

NOTE

- Please order mounting bracket for vertical mounting separately

Cabinet Accessories – Socket strips

USA SOCKET STRIP



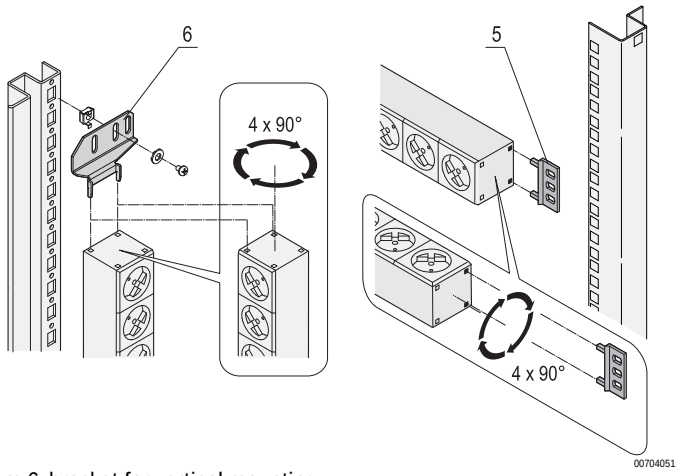

Item 6: bracket for vertical mounting

- Socket strips with USA sockets, alternatively with switch
- Mounting height 1 U
- Connecting cable 2 m, with USA plug
- Socket strips can be rotated through all four directions (in 90° increments) during installation
- Horizontal and vertical mounting
- 115 V, 15 A
- In accordance with UL-498

DELIVERY COMPRISES (assembled)

Item	Qty	Description
1	1	Al extrusion, 1 U, anodised, for sockets and functional elements
2		USA sockets (PA, RAL 7035) and switch (illuminated), for type and quantity see Order information
3	2	End piece, PA, RAL 7035
4	1	Connecting cable, black, 2 m, 05VV-F 3G 1.5 mm^2, with USA socket, PVC, encapsulated
5	2	Mounting bracket, PA, RAL 7035, only for 19" versions

ORDER INFORMATION

Description	Socket inserts	Length Inch	Length mm	Depth mm	Part no.
US	11	19"	438.5	44	**60110-240**
US	15	–	947.5	44	**60110-241**
US with switch	11	19"	438.5	44	**60110-242**
Delivery: fitted in cabinet or on frame					**Part no./05**
Delivery: supplied loose with cabinet or frame					**Part no./35**
Accessories					
Item 6 Mounting bracket for one socket strip for vertical mounting, St, 2 mm, PU 2 pieces					**20110-068**
Mounting plate for mounting of two socket strips side by side for vertical mounting, St, 2 mm, height 70 mm, depth 135 mm, PU 2 pieces					23130-010

NOTE

- Please order mounting bracket for vertical mounting separately

Part number in bold face type: ready for despatch within 2 working days
Part number in normal type: ready for despatch within 10 working days

SWISS SOCKET STRIP



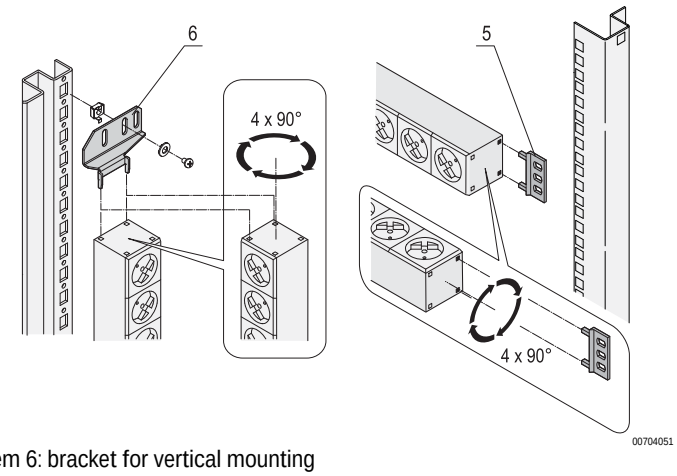

Item 6: bracket for vertical mounting

- Socket strips with sockets, Swiss version, optionally with switch
- Installation height 1 U
- Connecting cable 2 m with Swiss version plug
- Socket strips can be rotated through all four directions (in 90° increments) during installation
- Horizontal and vertical mounting
- 230 V, 10 A
- In accordance with SEV.IEC 60884

CE

DELIVERY COMPRISES (assembled)

Item	Qty	Description
1	1	Al extrusion, 1 U, anodised, for sockets and functional elements
2		Sockets, Swiss version (PA, RAL 7035), switch (illuminated), for type and quantity see Order information
3	2	End piece, PA, RAL 7035
4	1	Supply cable, black, 2 m, 05VV-F 3G 1.0 mm^2, with plug (Swiss version), PVC, moulded
5	2	Mounting bracket, PA, RAL 7035

ORDER INFORMATION

Description	Sockets	Length Inch	Length mm	Depth mm	Part no.
Swiss version	10	19"	438.5	44	**60110-453**
Swiss version with switch	9	19"	438.5	44	**60110-454**
Delivery: fitted in cabinet or on frame					**Part no./05**
Delivery: supplied loose with cabinet or frame					**Part no./35**
Accessories					
Item 6 Mounting bracket for one socket strip for vertical mounting, St, 2 mm, PU 2 pieces					**20110-068**
Mounting plate for mounting of two socket strips side by side for vertical mounting, St, 2 mm, height 70 mm, depth 135 mm, PU 2 pieces					23130-010

NOTE

- Please order mounting bracket for vertical mounting separately

Cabinet Accessories – Socket strips

SOCKET STRIPS WITH POWER MEASUREMENT READOUT ON LOCAL DISPLAY



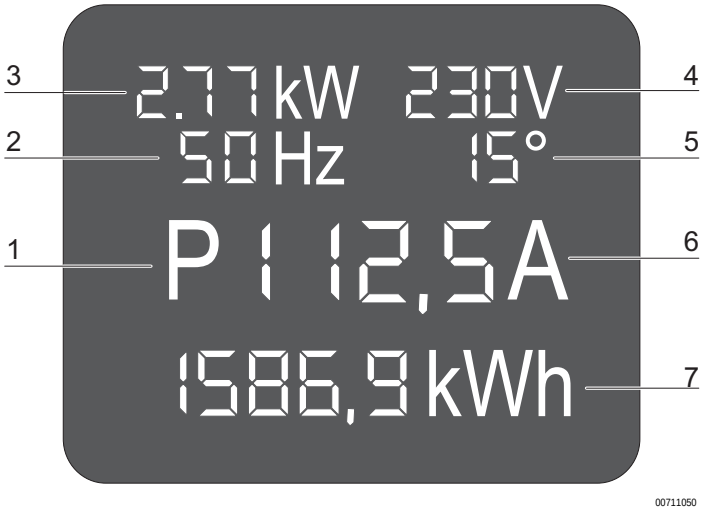

1: Phase indication (P1) - shows measured phase values
2: Frequency (Hz) - current mains frequency
3: Power measurement (kW) - actual power being consumed by consumers taking phase shift into consideration (power consumption of connected devices)
4: Mains voltage (V) - current voltage of mains to which the measurement unit is currently connected
5: Phase angle (°) - phase shift in the mains supply
6: Current (A) - current now being drawn by the connected devices
7: Kilowatt-hours (kWh) - energy meter to record the energy consumption of the connected equipment

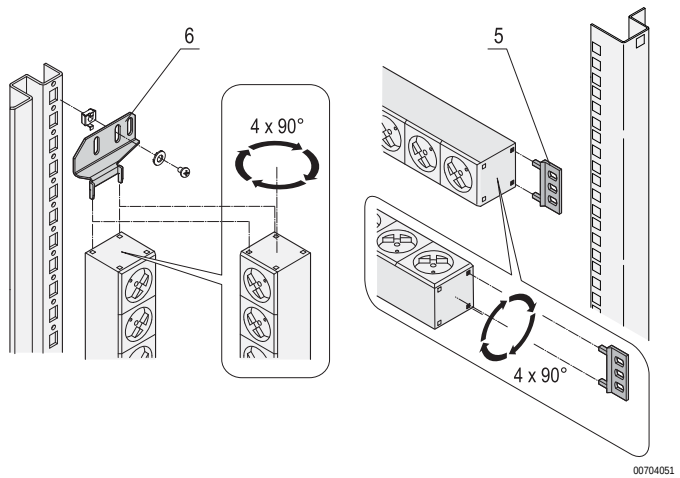

- Socket strips with Schuko or IEC 60320-C13 sockets
- Integrated measurement and display via local display unit
- Mounting height 1 U
- Socket strips can be rotated through all four directions (in 90° increments) during installation
- Horizontal and vertical mounting

CE

DELIVERY COMPRISES

Item	Qty	Description
1	1	Al extrusion, 1 U, anodised, to accept the sockets and display
2		Sockets, PA, for type and quantity see Order information
3	2	End piece, PA, RAL 7035
4	1	Connecting cable, black, 2 m, 05VV-F 3G 1.5 mm^2, with SCHUKO/UTE connector, PVC, encapsulated
5	2	Mounting bracket, PA, RAL 7035
7	1	User manual

ORDER INFORMATION

Height U	Length	mm	Measure-ments	Depth mm	Number of outputs	Part no.
1	19"	438.5	I, V, P, f, cos phi	44	7 x SCHUKO, "German 3-wire", earthed/ grounded	**60110-294**
1	19"	438.5	I, V, P, f, cos phi	44	8 x IEC C13	**60110-296**
Delivery: fitted in cabinet or on frame						**Part no./05**
Delivery: supplied loose with cabinet or frame						**Part no./35**
Accessories						
Item 6 Mounting bracket for one socket strip for vertical mounting, St, 2 mm, PU 2 pieces						**20110-068**
Mounting plate for mounting of two socket strips side by side for vertical mounting, St, 2 mm, height 70 mm, depth 135 mm, PU 2 pieces						23130-010

Part number in bold face type: ready for despatch within 2 working days
Part number in normal type: ready for despatch within 10 working days

Cabinet Accessories – Socket strips

19" POWER DISTRIBUTOR , 3-PHASE



00708033



00708035

Overcurrent protection switch (per phase and output socket)



00708034

Rear: Plug retaining clip and cable fitting



00708041

Mains cable for Wieland® socket strips

- 3-phase distributor for connecting to single-phase consumers or socket strips
- Input 3-phase 400 V_{AC} (32 A or 63 A)
- Output via IEC 60320-C19 sockets
  - 6 × 230 V_{AC} in 32 A/phase version
  - 9 × 230 V_{AC} in 63 A/phase version
- Overcurrent protection for each output

CE

DELIVERY COMPRISES (assembled)

Item	Qty	Description
1	1	19" power distributor, 3 U, St, 1.5 mm, RAL 7021, with cable fitting M32, plastic, white
2	6/9	Socket inserts IEC 60320-C19, with plug retaining clip, quantity see Order information
3	6/9	Overcurrent protection switch, 16 A, quantity see Order information
4	2	Handle, Al, black, incl. assembly kit (supplied loose)

ORDER INFORMATION

Height mm	Width mm	Depth mm	Output	Input	Part no.
131	484	250	6 (2 × 230 V_{AC} per phase)	3 × 32 A (400 V_{AC})	**60110-365**
131	484	250	9 (3 × 230 V_{AC} per phase)	3 × 63 A (400 V_{AC})	**60110-366**
Delivery: fitted in cabinet or on frame					**Part no./05**
Delivery: supplied loose with cabinet or frame					**Part no./35**
Accessories					
Mains cable, IEC 60320 C20 plug, Wieland® socket to connect 19" power distributor to Wieland®sockets length 1 m, 1 piece					**60110-326**
Mains cable, IEC 60320 C20 plug, Wieland® socket to connect 19" power distributor to Wieland®sockets length 1 m, 1 piece					**60110-327**
Mains cable, IEC 60320 C20 plug, Wieland® socket to connect 19" power distributor to Wieland®sockets length 5 m, 1 piece					**60110-328**

NOTE

- SCHUKO socket strip see page 3.67
- UTE socket strip see page 3.68
- IEC socket strip see page 3.69

Cabinet Accessories – Socket strips

SCHUKO SOCKET STRIP WITH WIELAND® INPUT





Overcurrent protection switch

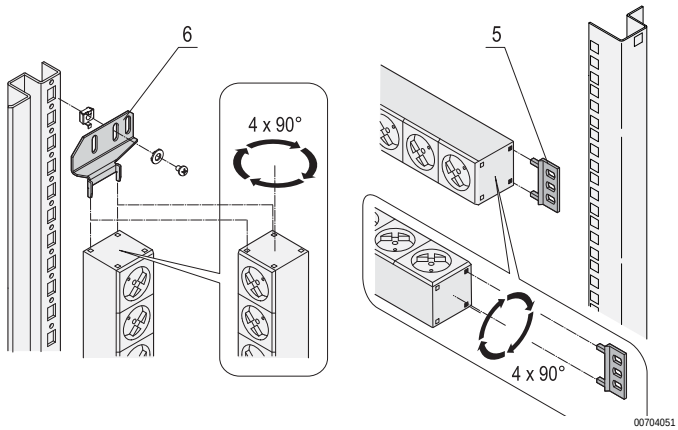

Item 6: bracket for vertical mounting

- Installation height 1 U
- Input via Wieland® GST 18 plug
- Output via SCHUKO sockets
- Versions with or without overcurrent protection
- Sockets in white, black or red
- Socket strips can be rotated through all four directions (in 90° increments) during installation
- Horizontal or vertical mounting
- In accordance with DIN 57620

CE

DELIVERY COMPRISES

Item	Qty	Description
1	1	Al extrusion, 1 U, anodised, length 438.5 mm, depth 44 mm, height 44.45; to accept the sockets
2	6/8	Sockets (rotated 35°, polyamide), quantity and colour see Order information
3	2	End piece, PA, RAL 7035
4	1	Wieland connecting socket® GST 18
5	2	Mounting bracket, PA, RAL 7035

NOTE

- Please order bracket for vertical mounting seperately
- Mains connection cables, see page 3.70
- 19" power distributor for connection of multiple socket strips, see page 3.66

ORDER INFORMATION

Description	Sockets	Length Inch	Length mm	Depth mm	Functional element	Part no.
SCHUKO, white, Wieland®,with over-current protection switch	6	19"	438.5	44	Overcurrent protection	**60110-352**
SCHUKO, black, Wieland®,with over-current protection switch	6	19"	438.5	44	Overcurrent protection	**60110-353**
SCHUKO, red, Wieland®,with over-current protection switch	6	19"	438.5	44	Overcurrent protection	**60110-354**
SCHUKO, white, Wieland®	8	19"	438.5	44	–	**60110-343**
SCHUKO, black, Wieland®	8	19"	438.5	44	–	**60110-344**
SCHUKO, red, Wieland®	8	19"	438.5	44	–	**60110-345**
Delivery: fitted in cabinet or on frame						**Part no./05**
Delivery: supplied loose with cabinet or frame						**Part no./35**
Accessories						
Item 6 Mounting bracket for one socket strip for vertical mounting, St, 2 mm, PU 2 pieces						**20110-068**
Mounting plate for mounting of two socket strips side by side for vertical mounting, St, 2 mm, height 70 mm, depth 135 mm, PU 2 pieces						23130-010

Part number in bold face type: ready for despatch within 2 working days
Part number in normal type: ready for despatch within 10 working days

Cabinet Accessories – Socket strips

UTE SOCKET STRIP WITH WIELAND® CONNECTION





Overcurrent protection switch

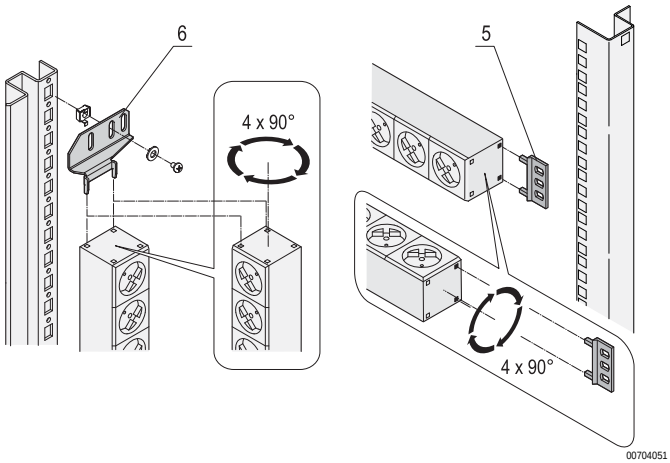

Item 6: bracket for vertical mounting

- Installation height 1 U
- Input via Wieland® GST 18 plug
- Output via UTE sockets
- Versions with or without overcurrent protection
- Sockets in white, black or red
- Socket strips can be rotated through all four directions (in 90° increments) during fitting
- Horizontal or vertical mounting
- In accordance with NFC 61-303

CE

DELIVERY COMPRISES

Item	Qty	Description
1	1	Al extrusion, 1 U, anodised, length 438.5 mm, depth 44 mm, height 44.45; to accept the sockets
2	6/8	Socket inserts (rotated 35°, polyamide), quantity and colour see Order information
3	2	End piece, PA, RAL 7035
4	1	Wieland connecting socket® GST 18
5	2	Mounting bracket, PA, RAL 7035

NOTE

- Please order mounting bracket for vertical mounting separately
- Mains connection cables see page 3.70
- 19" power distributor to connect multiple socket strips see page 3.66

ORDER INFORMATION

Description	Sockets	Length Inch	Length mm	Depth mm	Functional element	Part no.
UTE, white, Wieland®, with over-current protection switch	6	19"	438.5	44	Overcurrent protection	**60110-355**
UTE, black, Wieland®, with over-current protection switch	6	19"	438.5	44	Overcurrent protection	**60110-356**
UTE, red, Wieland®, with over-current protection switch	6	19"	438.5	44	Overcurrent protection	**60110-357**
UTE, white, Wieland®	8	19"	438.5	44	–	**60110-346**
UTE, black, Wieland®	8	19"	438.5	44	–	**60110-347**
UTE, red, Wieland®	8	19"	438.5	44	–	**60110-348**
Delivery: fitted in cabinet or on frame						**Part no./05**
Delivery: supplied loose with cabinet or frame						**Part no./35**
Accessories						
Item 6 Mounting bracket for one socket strip for vertical mounting, St, 2 mm, PU 2 pieces						**20110-068**
Mounting plate for mounting of two socket strips side by side for vertical mounting, St, 2 mm, height 70 mm, depth 135 mm, PU 2 pieces						23130-010

Cabinet Accessories – Socket strips

IEC SOCKET STRIP WITH WIELAND® CONNECTION





Strain relief provided by locking tabs



Overcurrent protection switch

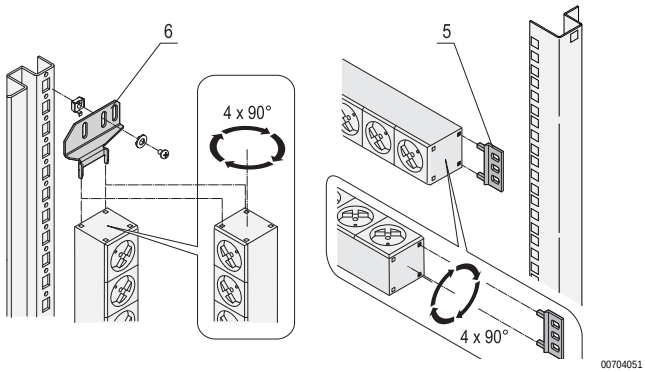

Item 6: bracket for vertical mounting

- Installation height 1 U
- Input via Wieland®GST 18 plug
- Output via IEC 60320 C-13 sockets
- Versions with or without overcurrent protection
- Socket inserts in white, black or red
- Socket strips can be rotated through all four directions (in 90° increments) during fitting
- Horizontal or vertical mounting
- In accordance with IEC 60320

CE

DELIVERY COMPRISES

Item	Qty	Description
1	1	Al extrusion, 1 U, anodised, length 438.5 mm, depth 44 mm, height 44.45; to accept the sockets
2	6/12	Sockets (rotated 35°, polyamide), quantity and colour see Order information
3	2	End piece, PA, RAL 7035
4	1	Wieland connecting socket® GST 18
5	2	Mounting bracket, PA, RAL 7035

NOTE

- Please order mounting bracket for vertical mounting separately
- Mains connection cables see page 3.70
- 19" power distributor to connect multiple socket strips see page 3.66

ORDER INFORMATION

Description	Sockets	Length Inch	Length mm	Depth mm	Functional element	Part no.
IEC, white, Wieland®, with over-current protection switch	6	19"	438.5	44	Overcurrent protection	**60110-349**
IEC, black, Wieland®, with over-current protection switch	6	19"	438.5	44	Overcurrent protection	**60110-350**
IEC, red, Wieland®, with over-current protection switch	6	19"	438.5	44	Overcurrent protection	**60110-351**
IEC, white, Wieland®	12	19"	438.5	44	–	**60110-340**
IEC, black, Wieland®	12	19"	438.5	44	–	**60110-341**
IEC, red, Wieland®	12	19"	438.5	44	–	**60110-342**
Delivery: fitted in cabinet or on frame						**Part no./05**
Delivery: supplied loose with cabinet or frame						**Part no./35**
Accessories						
Item 6 Mounting bracket for one socket strip for vertical mounting, St, 2 mm, PU 2 pieces						**20110-068**
Mounting plate for mounting of two socket strips side by side for vertical mounting, St, 2 mm, height 70 mm, depth 135 mm, PU 2 pieces						23130-010
Locking tab for IEC 60320-C13 connector PU 12 pieces						**60110-362**
Mains cable, IEC for locking tab IEC 60320-C14 plug, IEC 60320 C13 socket, 0.5 m, 1 piece						**60110-360**
Mains cable, IEC for locking tab IEC 60320-C14 plug, IEC 60320 C13 socket, 1 m, 1 piece						**60110-361**

Part number in bold face type: ready for despatch within 2 working days
Part number in normal type: ready for despatch within 10 working days

Cabinet Accessories – Socket strips

CONNECTING CABLES FOR WIELAND® SOCKET STRIPS



00708031

- Enables simple connection to current supply (e.g. for socket strips)
- Different connecting plugs
- Different cable lengths available

CE

DELIVERY COMPRISES

Pos.	Menge	Beschreibung
1	1	Connecting cable, 1.5 mm^2, black, input, output and cable lengths see Order information

ORDER INFORMATION

Input	Current A	Output	Length m	Part no.
Open end	16	Wieland® GST 18	1	**60110-320**
Open end	16	Wieland® GST 18	2.5	**60110-321**
Open end	16	Wieland® GST 18	5	**60110-322**
IEC 60309	16	Wieland® GST 18	1	**60110-323**
IEC 60309	16	Wieland® GST 18	2.5	**60110-324**
IEC 60309	16	Wieland® GST 18	5	**60110-325**
IEC 60320 C20	16	Wieland® GST 18	1	**60110-326**
IEC 60320 C20	16	Wieland® GST 18	2.5	**60110-327**
IEC 60320 C20	16	Wieland® GST 18	5	**60110-328**
SCHUKO (German 3-wire earthed) / UTE	16	Wieland® GST 18	1	**60110-329**
SCHUKO (German 3-wire earthed) / UTE	16	Wieland® GST 18	2.5	**60110-330**
BS plug	13	Wieland® GST 18	1	**60110-331**
BS plug	13	Wieland® GST 18	2.5	**60110-332**

NOTE

- Other inputs, outputs and cable lengths available on request

Cabinet Accessories – Socket strips

THREE PHASE POWER DISTRIBUTION WITH 19" POWER DISTRIBUTOR AND SOCKET STRIPS WITH WIELAND® CONNECTION

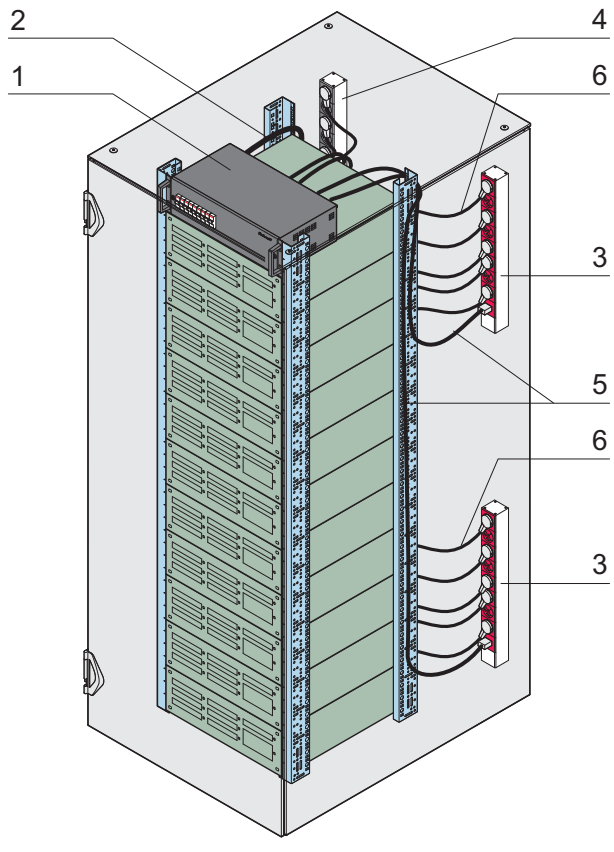

- Modular construction
- Connection of 19" power distributor (3-phase) in cabinet requires an electrician
- Simple cabling of socket strips with plug-and-play functionality

CABLING EXAMPLE

Item	Description
1	19" power distributor
2	3-phase current connecting cable
3	Socket strips with Wieland® connection, red
4	Socket strips with Wieland® connection, black
5	Mains cable, from 19" power distributor to socket strip
6	Mains cable, from socket strip to consumer (e.g. server)

OVERVIEW

MAIN KATALOG

Cabinets 1

Wall mounted cases 2

Accessories for cabinets and wall mounted cases . . 3

Climate control . . 4

Electronics cases 5

Subracks/ 19" chassis 6

Front panels, plug-in units 7

Systems 8

Power supply units 9

Backplanes 10

Connectors, front panel component system 11

Appendix 12



00711001



00715001

Display

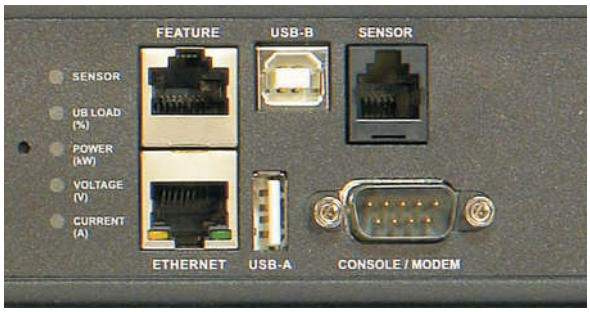

00711009

Interfaces

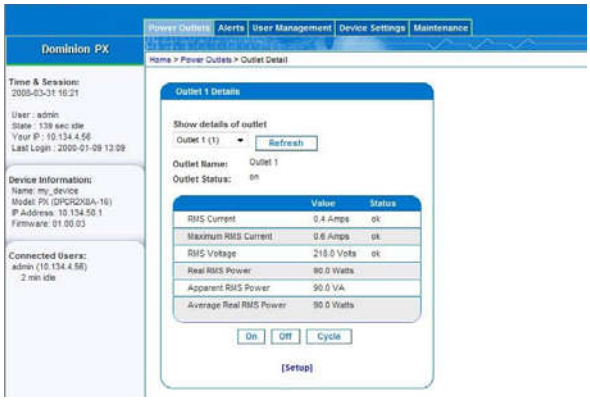

00708013

Telemonitoring and parametrisation with web-based user interface

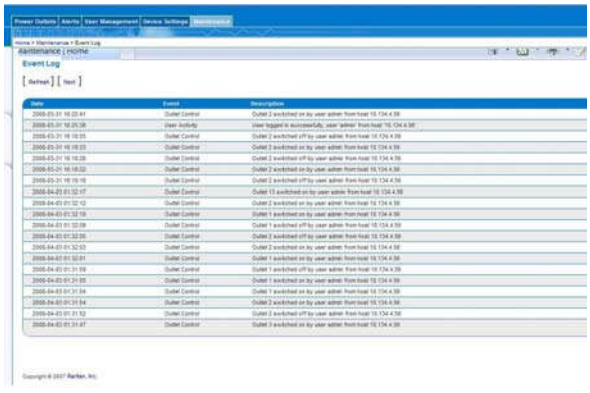

00708014

Event logging

Cabinet Accessories – Power Control socket

OVERVIEW

POWER MANAGEMENT

- **Monitoring of power, current and voltage of the entire socket strip or for each separate socket insert**
- **Telemonitoring and local indication via display**
- **Remote control of individual inserts (switch on/off)**
- **Programmable sequential switch-on/off of individual inserts**
- **Individual user access authorisations for each socket insert**



00715002

MULTIMETER

- Measurement of current, voltage, apparent power, true power and power factor per phase or outlet
- Data sent to network or shown on local display



00715006

TELEMONITORED SOCKET STRIPS

- Measurement of current, voltage, apparent power, true power and power factor per phase or outlet
- Data sent to network or shown on local display
- Measurement at phase level and switch function on request

TELEMONITORED AND REMOTE-CONTROLLED SOCKET STRIPS

- Measurement of current, voltage, apparent power, true power and energy consumption at outlet level
- Data sent to network or shown on local display
- Remote-controlled switch-on/off of individual outputs



00715007

ENVIRONMENTAL SENSORS

- Sensors (temperature, humidity, differential pressure, airflow...) and hub for connecting multiple sensors, see from page 3.49

SERVICEPLUS

e.g. individual configuration (dimensions, socket inserts, mains supply)

Overview **3.72**

Multimeter **3.75**

Telemonitored (per phase) socket strips **3.76**

Remote-controlled socket strips, telemonitored on each phase **3.77**

Remote-controlled socket strips, telemonitored on each outlet 3.77

Power management software **3.79**

RACKPOWER PDU 230 VAC SINGLE PHASE (RACK- OR PANEL MOUNT), FOR CONFIGURATION



RackPowerPDUs_os

RackPower Intelligent Power Distribution Units are a configured to order product that addresses controlling power on Cabinets as well as Open Frame Racks and Wall-Mount enclosures. Design your power solution using a variety of configuration options. The units are available in horizontal 19-in. rack or vertical mounting capabilities and a broad range of features.

- Single or multi-phase
- Input voltages: North American 110 / 120 V_{AC} or 208 V_{AC}, European and Asia 230 V_{AC} or 400 V_{AC}
- Global plug and receptacles NEMA and IEC rated
- 5 Configuration types: RP3000, RP2000, RP1500, RP1000, RP100
- External communications and monitoring ? protected and secure LAN connections
- Local and remote power monitoring of single outlets and circuits showing data for current (AMP), voltage (Volt), power (kW), energy consumption (kWh) and power factor of entire PDU with a metering accuracy to within +/- 1%
- Field Replaceable "Hot swappable" Smart Monitor (RP-Meter) and DC Module
- Remote power on/off switch
- 19" Rack Mounting (1 and 2 U offering)
- Versatile vertical / rack and cabinet mounting
- Surge protection
- Dual Power feed entry for single phase RackPower PDUs
- Temperature sensor or temperature & humidity sensor
- Power cord whip various lengths, color and plugs
- To configure your PDU, go to http://schroff.biz/PDU_Webapp/



NPDV_NPDH_IPdongles_os

IP Gateway (Vertical and horizontal / 19 "mounting)



NPS1_NPS2_Sensors_os

Temperature sensor and combination sensor (temperature and humidity)

DELIVERY INCLUDES

Item	Qty	Description
1	1	Steel housing, standard is black, other finishes available
2	1	Various cord length and plug styles available; also available in LSZH (low smoke zero halogen)
3	1	Mounting hardware

ORDER INFORMATION

Description	Description	Part no.
PDU 230 V_{AC} single phase	Rack mount	**NP2RX**
PDU 230 V_{AC} single phase	Panel mount	**NP2PX**
PDU 400 V_{AC} multi-phase	Rack mount	**NP3RX**
PDU 400 V_{AC} multi-phase	Panel mount	**NP3PX**
Accessories		
IP Gateway for PDU (vertical mounting) 1 piece		**NPDV**
IP Gateway for PDU (horizontal / 19" mounting) 1 piece		**NPDH**
Temperature sensor for PDU 1 piece		**NPS1**
Combination sensor, temperature and humidity sensor for PDU 1 piece		**NPS2**

NOTE

- Industrie Standards:
  UL Listed File E309439 UL 60950-1 Information Technology Equipment cUL Listed File E309439 CSA-C22.2 No. 60950-1 Information Technology Equipment FCC, CE, RoHs, REACH

TELEMONITORED MULTIMETER



00715002

Front view



00715003

Rear view

- Inline meter, 1 U, 19" case with 19" mounting brackets
- Measures current, voltage and power (apparent and true power) per phase and total
- Local display of current and voltage per phase and sum values
- Ethernet interface and web interface
- 4 consumers or socket strips can be connected; input via IEC 60320 C20 plug; outlet via IEC 60320 C19 sockets
- Mains input via C13 socket conforming to IEC 60320
- To record temperature, humidity etc, environmental sensors can be connected

DELIVERY INCLUDES

Item	Qty	Description
1	1	Case, black, width 440.0 mm, display and control keys, interfaces on front and rear
2	1	Mains cable, C13 socket to IEC 60320, cable length 1.5 m
3	2	19" mounting bracket, length 305 mm, St, 1 mm, black
4	1	Cable support rail

ORDER INFORMATION

Height U	Width mm	Depth mm	Input	Number of outputs	Output current A	Part no.
1	440.0	183	4 x IEC C20	4 x IEC C19	16	60110-446
Accessories						
Temperature sensor Cable length 3 m, 1 piece						60110-313
Temperature/ humidity combi sensor Cable length 3 m, 1 piece						60110-314
Two temperature/ humidity combi sensors Cable length 2 x 3 m, 2 pieces						60110-315
Dual potential-free contact sensor Cable length x m, 1 piece						DPX-CC2-TR
Two temperature sensors and one temperature/ humidity combi sensor Cable length 3 x 3 m, 1 piece						DPX-T3H1
Differential pressure and temperature sensor Cable length 3 m, 1 piece						DPX-T1DP1
Airflow sensor Cable length 3 m, 1 piece						DPX-AF1
Hub to accept 4 sensors connecting cable 1 m, assembly kit, 1 piece						60110-316

NOTE

- 3-phase version on request
- For power management software see page 3.79
- Suitable socket strips see Socket Strips chapter, page 3.58
- Sensors (temperature, humidity, differential pressure, airflow...) and hub for connecting multiple sensors, see from page 3.48
- 19" assembly kit, see page 3.17

Part number in bold face type: ready for shipping within 2 working days
Part number in normal type: ready for shipping within 10 working days

TELEMONITORED (PER PHASE) SOCKET STRIPS



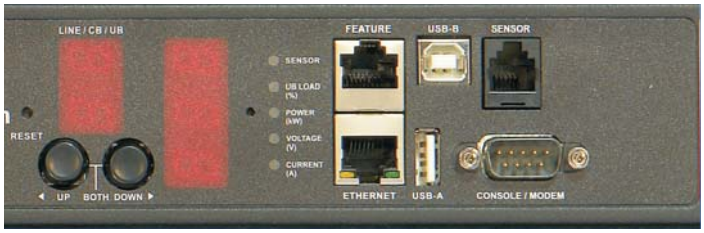

00711009

Display, interface

- Measurement of current, voltage and power (apparent and true power) per phase and sum value
- Local display of current and voltage per phase and sum value
- Ethernet interface and web interface
- Outlets to IEC 60320 with C13 sockets (230 V_{AC}, 10 A) and C19 sockets (230 V_{AC}, 16 A)
- Mains supply 230 V_{AC}/400 V_{AC}, 16 A or 32 A plug, cable length 3 m
- With magnetic circuit breakers to UL 489 (for 32 A version)
- To record temperature, humidity etc, environmental sensors can be connected

DELIVERY INCLUDES

Item	Qty	Description
1	1	Socket strip, black, with interfaces, socket inserts and display, mains cable length 3 m
2	1	Fixing materials kit
3	1	User manual

ORDER INFORMATION

Length mm	Length Inch	Height mm	Depth mm	Input	Number of outputs	Part no.
440	19"	44	133.0	230 V_{AC}, 16 A, 1-phase, IEC 60320 C20	8 x IEC C13	60110-306
1298	–	52	43.0	230 V_{AC}, 16 A, 1-phase, IEC 60320 C20	24 x IEC C13	60110-307
1539	–	52	53.0	230 V_{AC}, 32 A, 1-phase, IEC 60309	20 x IEC C13, 4 x IEC C19	60110-308
1780	–	55	52	400 V_{AC}, 32 A, 3-phase, IEC 60309	24 x IEC C13, 12 x IEC C19	60110-455
Accessories						
Temperature sensor Cable length 3 m, 1 piece						60110-313
Temperature/ humidity combi sensor Cable length 3 m, 1 piece						60110-314
Two temperature/ humidity combi sensors Cable length 2 x 3 m, 2 pieces						60110-315
Dual potential-free contact sensor Cable length x m, 1 piece						DPX-CC2-TR
Two temperature sensors and one temperature/ humidity combi sensor Cable length 3 x 3 m, 1 piece						DPX-T3H1
Differential pressure and temperature sensor Cable length 3 m, 1 piece						DPX-T1DP1
Airflow sensor Cable length 3 m, 1 piece						DPX-AF1
Hub to accept 4 sensors connecting cable 1 m, assembly kit, 1 piece						60110-316

NOTE

- Versions with additional switching function on request
- For power management software see page 3.79
- Sensors (temperature, humidity, differential pressure, airflow...) and hub for connecting multiple sensors see from page 3.48

REMOTE-CONTROLLED SOCKET STRIPS, TELEMONITORED ON EACH PHASE



00711001



00711009

Display, interface

- Measures current, voltage and power (apparent and true power) per phase and total
- Local display of current and voltage per phase and sum values
- Remote-controlled on/off switching of connected consumers
- Ethernet interface and web interface
- Outlets to IEC 60320 with C13 sockets (230 V_{AC}, 10 A) and C19 sockets (230 V_{AC}, 16 A)
- Mains supply 230 V_{AC}/ 400 V_{AC}, 16 A or 32 A plug, cable length 3 m
- With magnetic circuit breakers to UL 489 (for 32 A version)
- To record temperature, humidity etc, environmental sensors can be connected

DELIVERY INCLUDES

Item	Qty	Description
1	1	Socket strip, black, with interfaces, socket inserts and display, mains cable length 3 m
2	1	Fixing materials kit
3	1	User manual

ORDER INFORMATION

Length mm	Length Inch	Height mm	Depth mm	Input	Number of outputs	Part no.
440	19"	44	133	230 V_{AC}, 16 A, 1-phase, IEC 60320 C20	8 x IEC C13	60110-447
1297	–	52	65	230 V_{AC}, 16 A, 1-phase, IEC 60320 C20	24 x IEC C13	60110-449
1539	–	52	65	230 V_{AC}, 32 A, 1-phase, IEC 60309	20 x IEC C13, 4 x IEC C19	60110-448
1780	–	52	65	400 V_{AC}, 32 A, 3-phase, IEC 60309	24 x IEC C13, 12 x IEC C19	60110-450
Accessories						
Temperature sensor Cable length 3 m, 1 piece						60110-313
Temperature/ humidity combi sensor Cable length 3 m, 1 piece						60110-314
Two temperature/ humidity combi sensors Cable length 2 x 3 m, 2 pieces						60110-315
Dual potential-free contact sensor Cable length x m, 1 piece						DPX-CC2-TR
Two temperature sensors and one temperature/ humidity combi sensor Cable length 3 x 3 m, 1 piece						DPX-T3H1
Differential pressure and temperature sensor Cable length 3 m, 1 piece						DPX-T1DP1
Airflow sensor Cable length 3 m, 1 piece						DPX-AF1
Hub to accept 4 sensors connecting cable 1 m, assembly kit, 1 piece						60110-316

NOTE

- For power management software see page 3.79
- Sensors (temperature, humidity, differential pressure, airflow...) and hub for connecting multiple sensors see from page 3.48

Part number in bold face type: ready for shipping within 2 working days
Part number in normal type: ready for shipping within 10 working days

Cabinet Accessories–Power Control socket strips

REMOTE-CONTROLLED SOCKET STRIPS, TELEMONITORED ON EACH OUTLET



00715009

- Remote-controlled on/off switching of connected consumers
- Measures current, voltage and power (apparent and true power) per outlet, phase and total
- Local display of current and voltage per outlet, phase and total
- Ethernet interface and web interface
- Outlets to IEC 60320 with C13 sockets (230 V_{AC}, 10 A) and C19 sockets (230 V_{AC}, 16 A)
- Mains input 230 V_{AC}, 32 A plug to IEC 60309, cable length 3 m
- With magnetic circuit breakers to UL 489
- To record temperature, humidity etc, environmental sensors can be connected

DELIVERY INCLUDES

Item	Qty	Description
1	1	Socket strip, black, with interfaces, socket inserts and display, mains cable length 3 m
2	1	Fixing materials kit
3	1	User manual

ORDER INFORMATION

Length mm	Inch	Height mm	Depth mm	Input	Number of outputs	Part no.
440	19"	44	183	230 V_{AC}, 16 A, 1	8 x IEC C13	60110-442
1539	–	52	65	230 V_{AC} 32 A, 1-phase, IEC 60309	20 x IEC C13	60110-443
1539	–	52	65	230 V_{AC}, 32 A, 1-phase, IEC 60309	20 x IEC C13, 4 x IEC C19	60110-444
1539	–	52	65	400 V_{AC}, 32 A, 3-phase, IEC 60309	21 x IEC C13, 3 x IEC C19	60110-445
Accessories						
Temperature sensor Cable length 3 m, 1 piece						60110-313
Temperature/ humidity combi sensor Cable length 3 m, 1 piece						60110-314
Two temperature/ humidity combi sensors Cable length 2 x 3 m, 2 pieces						60110-315
Dual potential-free contact sensor Cable length x m, 1 piece						DPX-CC2-TR
Two temperature sensors and one temperature/ humidity combi sensor Cable length 3 x 3 m, 1 piece						DPX-T3H1
Differential pressure and temperature sensor Cable length 3 m, 1 piece						DPX-T1DP1
Airflow sensor Cable length 3 m, 1 piece						DPX-AF1
Hub to accept 4 sensors connecting cable 1 m, assembly kit, 1 piece						60110-316

NOTE

- Differential current measurement available on request
- For power management software see page 3.79
- Sensors (temperature, humidity, differential pressure, airflow...) and hub for connecting multiple sensors see from page 3.48

POWER MANAGEMENT SOFTWARE

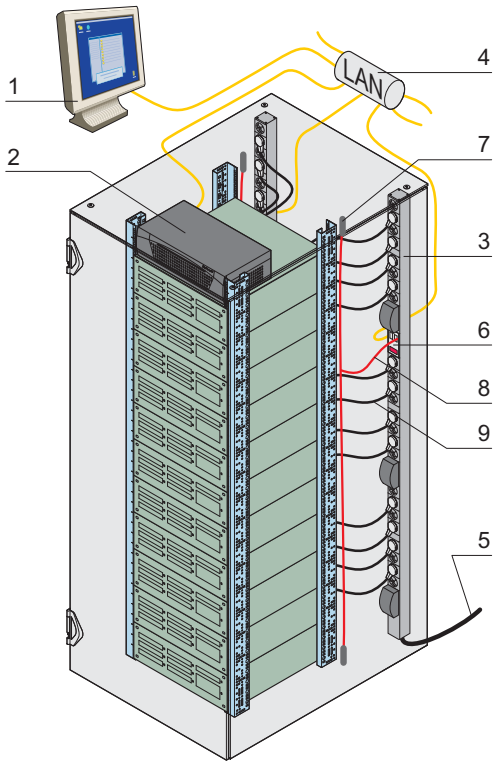

Cabling example

Item	Description
1	Real-time monitoring of web graphical user interface (GUI)
2	Existing customer server or an optionally available hardware system on which the software is installed
3	Telemonitored and remote-controlled socket strip, available with IEC C13 and C19 socket inserts
4	Linking of items 1, 2 and 3 to LAN
5	CEE power connection cable available with 230 V_{AC} (16 A or 32 A) or 400 V_{AC} (16 A and 32 A) supply
6	Local display
7	Telemonitored environmental sensors
8	Connection of sensors to socket strip
9	Mains cable, from socket strip to consumer (e.g. server)

Energy management with Power IQ®

- Centralised administration with mass configuration, firmware administration and designation of outputs
- Create energy, cost and active current reports at levels from individual plugs or IT devices through to the entire data centre
- Export graphical data
- Aggregate data from different manufacturers

ORDER INFORMATION

Description	Part no.
Power management software	on request

North America

Warwick, RI, USA
Tel +1.800.525.4682
San Diego, CA, USA
Tel +1.800.854.7086

Europe, Middle East & India

Straubenhardt, Germany
Tel +49 7082 794 0
Betschdorf, France
Tel +33 3 88 90 64 90
Warsaw, Poland
Tel +48 22 209 98 35
Hemel Hempstead,
Great Britain
Tel +44 1442 24 04 71
Lainate, Italy
Tel +39 02 932 714 1
Dubai, United Arab Emirates
Tel +971 4 37 81 700
Bangalore, India
Tel +91 80 67152000
Istanbul, Turkey
Tel +90 216 250 7374

Asia Pacific

Shanghai, China
Tel +86 21 2412 6943
Singapore
Tel +65 6768 5800
Shin-Yokohama, Japan
Tel +81 45 476 0271

Our powerful portfolio of brands:

CADDY ERICO HOFFMAN RAYCHEM SCHROFF TRACER

nVent

nVent.com/SCHROFF

©2018 nVent. All nVent marks and logos are owned or licensed by nVent Services GmbH or its affiliates. All other trademarks are the property of their respective owners.
nVent reserves the right to change specifications without notice.