Max. 41 m³/h

DC axial fans

☐ 60 x 25 mm



- **Material:** Housing: GRP[1] (PBT)
  Impeller: GRP[1] (PA)
- **Direction of air flow:** Exhaust over struts
- **Direction of rotation:** Clockwise, looking towards rotor
- **Connection:** Via single wires AWG 22, TR 64
- **Highlights:** Automatic speed adjustment with temperature sensor
- **Weight:** 66 g

- **Possible special versions:**
  (See chapter DC fans - specials)
  - Speed signal
  - Go / NoGo alarm
  - External temperature sensor
  - Internal temperature sensor
  - Moisture protection

1) Fiberglass-reinforced plastic

Series 600 N VARIOFAN **Nominal data**		Air flow	Air flow	**Nominal voltage**	Voltage range	Sound pressure level	Sound power level	Sintec sleeve bearings / Ball bearings	Power consumption	Nominal speed	Temperature range	Service life L_{10} (40 °C) ebm-papst standard / Service life L_{10} (T_{max}) ebm-papst standard	Life expectancy L_{10IPC} (40 °C) see page 17	Curve
	Type	**m³/h**	**cfm**	**VDC**	**VDC**	**dB(A)**	**Bel(A)**	□ / ■	**Watts**	**rpm⁻¹**	**°C**	**Hours**	**Hours**	
30 °C 55 °C	612 NGMI	18 35	10.6 20.6	**12**	8...12.6	14 28	3.5 4.6	□	1.3 1.7	2 150 4 100	-20...+65	80 000 / 45 000	135 000	① ②
30 °C 55 °C	612 NMI	16 35	9.4 20.6	**12**	8...12.6	16 28	3.6 4.6	■	1.0 1.4	2 400 4 100	-20...+65	80 000 / 45 000	135 000	③ ④
30 °C 55 °C	612 NGNI	23 41	13.5 24.1	**12**	8...12.6	18 35	3.8 5.0	□	1.7 2.4	2 900 5 100	-20...+65	70 000 / 40 000	117 500	⑤ ⑥
30 °C 55 °C	612 NNI	23 41	13.5 24.1	**12**	8...12.6	18 35	3.8 5.0	■	1.2 1.5	2 900 5 100	-20...+65	70 000 / 40 000	117 500	⑤ ⑥
30 °C 55 °C	612 NGNV	23 41	13.5 24.1	**12**	8...12.6	18 35	3.8 5.0	□	1.7 2.4	2 900 5 100	-20...+65	70 000 / 40 000	117 500	⑤ ⑥

Subject to change

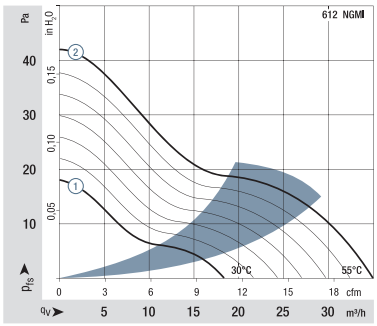

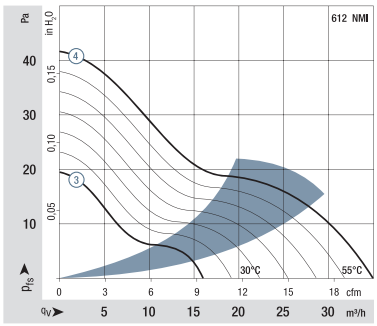

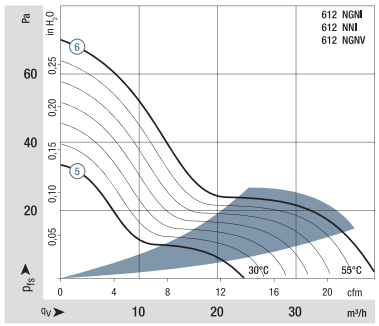

Air performance measured according to: ISO 5801. Installation category A, without contact protection.
Noise: Total sound power level L_{WA} ISO 103002 measured on half-sphere of 2 m; Sound pressure level L_{pA} measured at 1 m distance from fan axis.
The values given are applicable only under the specified measuring conditions and may differ depending on the installation conditions. In the event of deviation from the standard configuration, the parameters must be checked after installation! For detailed information see http://www.ebmpapst.com/general conditions

V types

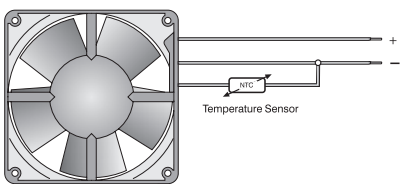

The temperature sensor for controlling the motor speed is not included in the scope of delivery.
For the temperature sensor LZ 370, see accessories.

I types

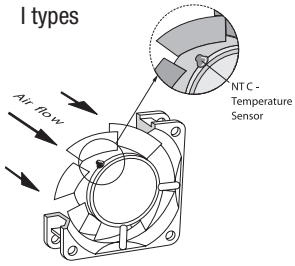

The temperature sensor (NTC resistor) for controlling the motor speed is positioned in the fan hub directly in the air flow.

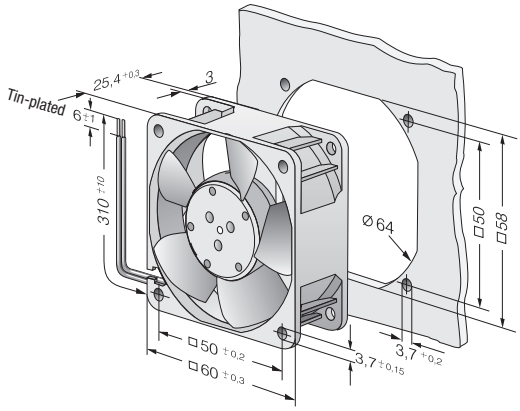

ebmpapst