Brand of NTN corporation

Technical data

UCFL212

Bearing units



Grey cast housing, radial insert ball bearing with socket set screws,seal with slinger

KIT CONTENT

UC212G2, FL212

VISUAL (S)

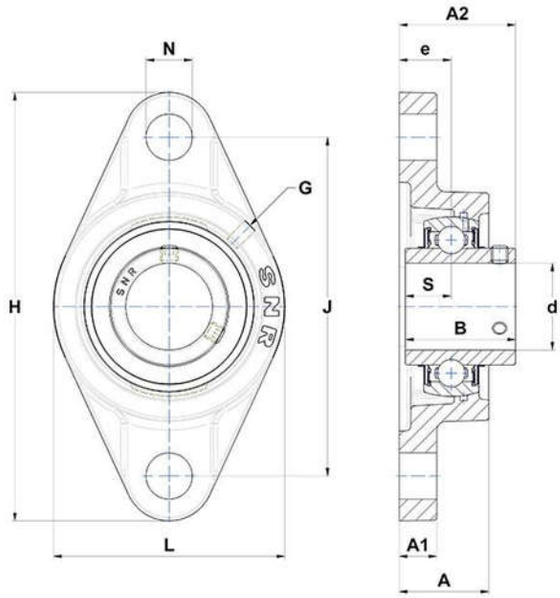

PRODUCT DEFINITION

Brand	SNR
A - Housing height	48 mm
A1 - Housing foot height / flange height	18 mm
A2 - Total height from mounting surface	68,7 mm
B - Width of Inner Ring	65,1 mm
d - Shaft diameter	60 mm

NTN Europe
1 rue des Usines · BP 2017 · 74010 Annecy Cedex · France · Tel. +33 (0)4 50 65 30 00
S.A. au capital de 322 639 919 € · RCS ANNECY B 325 821 072 · Id. Fiscale : FR 48 325 821 072
SIRET 325 821 072 00015 · Code APE 2815 Z · Code NACE 28.15

PRODUCT DEFINITION	
e - Distance mounting surface to bearing center	29 mm
G - Grease fitting	M6x1
H - Housing length, width or diameter	250 mm
J - Mounting holes distance	202 mm
L - Housing width / diameter	140 mm
N - Mounting hole dimension	23 mm
S - Distance front side/bearing centre	25,4 mm

PRODUCT PERFORMANCE	
C - Dynamic load rating	52500000 mN
C0 - Static load rating	32800000 mN
Operating temperature min.	253,15 °K
Operating temperature max.	373,15 °K

OTHER FEATURES	
Mass	3,81 kg
Recommended tightening torque for set screw	22 N-m